Description

idea Thermal CutOff (iTCO) is a fuse that uses low melting point alloys as the electrical connection point of the main circuit, with built-in heater as the control circuit, to achieve controlled fusing function. idea Thermal CutOff (iTCO) is consist mainly of Thermal Element, Flux Resin, Separator, Sealant, Alloy Thermal-Link, Feed Heater, Potting Glue, Electrode, Cover and Lead wire, sealed in plastic or ceramic housings.

idea Thermal CutOff (iTCO) is mainly used in the protection of new energy security, and secondary protection for charging and discharge circuits. idea Thermal CutOff (iTCO) mainly uses two electrodes which are connected with the thermal element of the fusing elements as electrical connections with passive temperature-sensing fusing actions. At the same time, Built-in heater with independent over-temperature protection heats the thermal element, provides sufficient heat to the fuse, cuts off the main circuit and disconnects the control circuit to achieve self-protection.

SETsafe | SETfuse idea Thermal CutOff (iTCO) THUxxx-R Series covers Rated Current: 200 A, 270 A, Rated Voltage 80 VDC, Rated Functioning Temp. 145 °C, with UL, cUL, TUV Approvals and RoHS, REACH compliant.

Features

- Low Impedance, Low Power Consumption
- MC Controlled Fusing Time ≤ 60 s
- Non-Resettable
- Active Control
- Over Temp. Protection
- Self-Control Protection
- RoHS and REACH Compliant

Application

- Electric Motorcycle, Electric Golf Cart, Electric Yacht
- Home Energy Storage
- Base Station Power Supply, Battery

Product Schematic

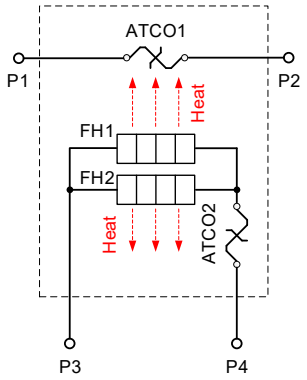

- P1 ~ P2 MC
- P3 ~ P4 CC

Structure Diagrams

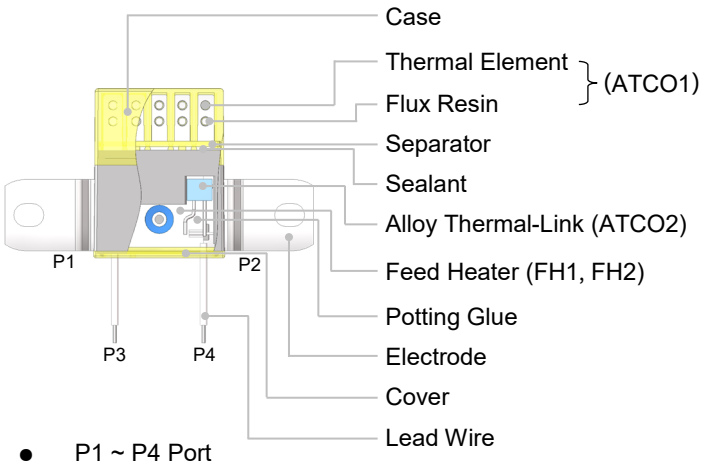

- P1 ~ P4 Port

All Rights Reserved by Xiamen SET Electronics Co., Ltd. 2024-2026 V1.2

Dimensions (Unit: mm)

L	47.5 ± 1.0
L_1	20.0 ± 0.2
L_2	25.5 ± 0.5
L_3	10.0 ± 0.2
L_4	70.0 ± 5.0
L_5	5.0 ± 1.0
W	36.5 ± 0.5
W_1	73.4 ± 1.0
W_2	86.9 ± 1.0
W_3	8.5 ± 0.15
t	1.5 ± 0.1
D	6.5 ± 0.2
H	12.4 ± 0.5

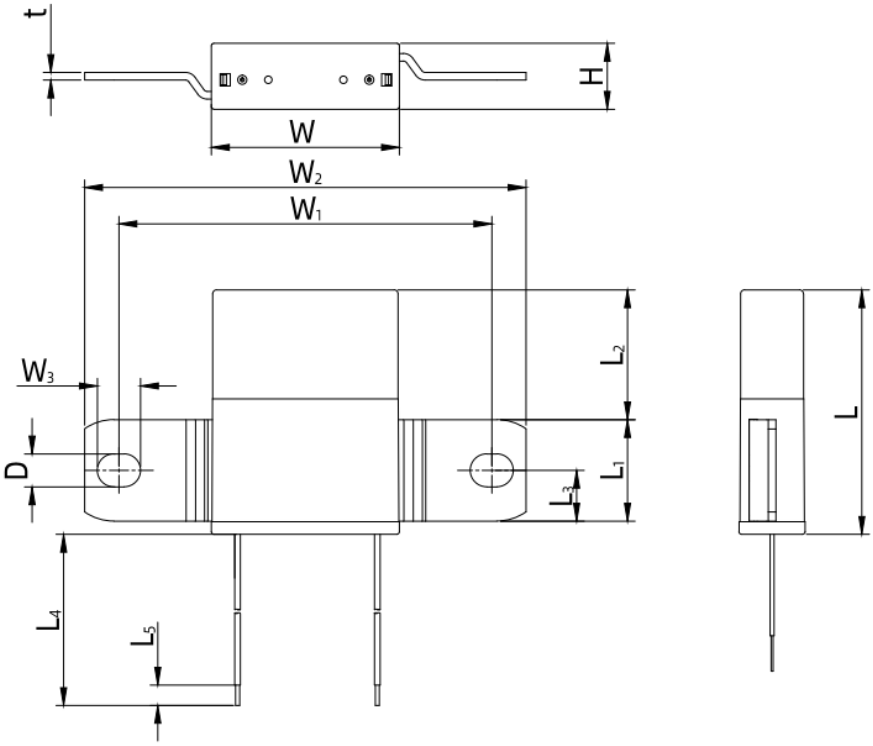

Agency Information

Agency Symbol	Standards	The File No. and certification No. obtained by SETsafe | SETfuse
	UL60691	E214712
	CAN-CSA-E60691	E214712
	EN 60127-1 EN 60127-7	J 50602721

All Rights Reserved by Xiamen SET Electronics Co., Ltd. 2024-2026 V1.2

Part Number System

THU145 - R5N - WGZ

Minimum Operating Current (A)
Z: Without Inbuilt Fuse

Rated Voltage (VDC)
G: 80

Rated Current (A)
U: 200
W: 270

Remote Signal
N: Without Remote Signal

Rated Operating Voltage (VDC)
R1: 12
R2: 24
R4: 36
R5: 48
R7: 72

Rated Functioning Temp. of MC (ºC)
145

Series
THUxxx-R

Marking

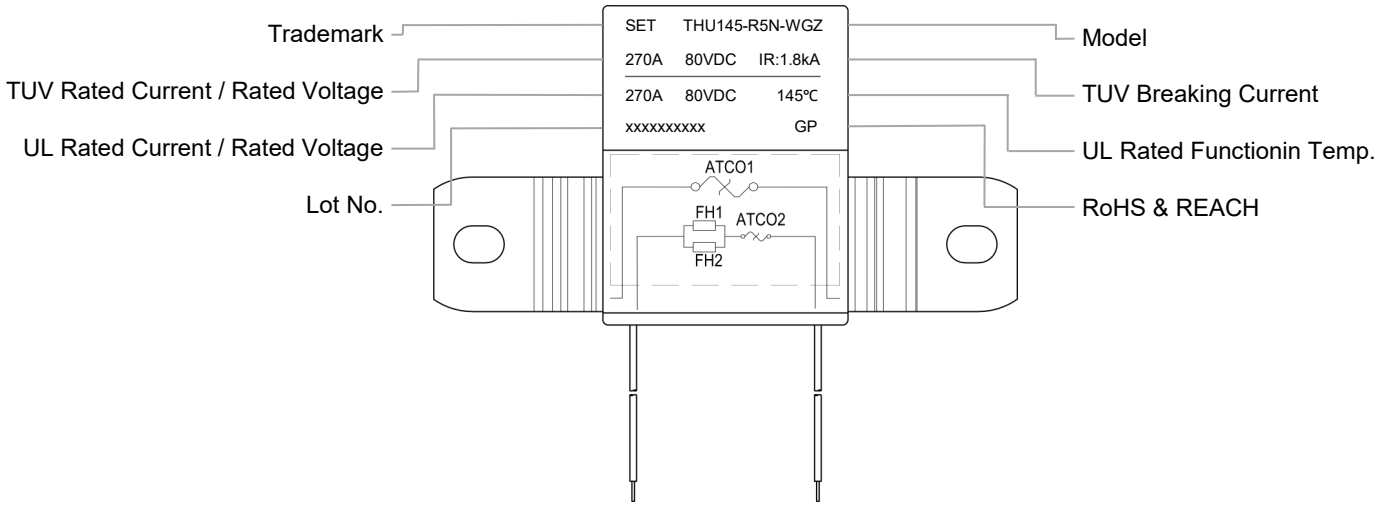

All Rights Reserved by Xiamen SET Electronics Co., Ltd. 2024-2026 V1.2

Specifications

Rated Operating Voltage (VDC)	Model		Main Circuit Specifications						Control Circuit Specifications		Fusing Time		Agency Information			RoHS REACH
			I_r	U_r	Fusing Temp.	T_h	T_m	Breaking Capacity	Resistance	Range of Operating Voltage	t_{mc} (P1 ~ P2)	t_{cc} (P3 ~ P4)	UL	cUL	TUV	
			(A)	DC (V)	(°C)	(°C)	(°C)	kA	(Ω)	DC (V)	(s)	(s)				
12	THU145-R1N-UGZ	UL/cUL Specifications	200	80	139 ± 4	85	180	N/A	0.4 ± 0.1	10 ~ 15	≤ 60	t_{mc} + (0 ~ 30)	●	●	●	●
		TUV Specifications	200	80	N/A	N/A	N/A	1.8								
24	THU145-R2N-UGZ	UL/cUL Specifications	200	80	139 ± 4	85	180	N/A	1.5 ± 0.3	19 ~ 27	≤ 60	t_{mc} + (0 ~ 30)	●	●	●	●
		TUV Specifications	200	80	N/A	N/A	N/A	1.8								
36	THU145-R4N-UGZ	UL/cUL Specifications	200	80	139 ± 4	85	180	N/A	3.4 ± 0.3	32 ~ 45	≤ 60	t_{mc} + (0 ~ 30)	●	●	●	●
		TUV Specifications	200	80	N/A	N/A	N/A	1.8								
48	THU145-R5N-UGZ	UL/cUL Specifications	200	80	139 ± 4	85	180	N/A	6.0 ± 1.0	40 ~ 60	≤ 60	t_{mc} + (0 ~ 30)	●	●	●	●
		TUV Specifications	200	80	N/A	N/A	N/A	1.8								
72	THU145-R7N-UGZ	UL/cUL Specifications	200	80	139 ± 4	85	180	N/A	12.0 ± 2.0	60 ~ 90	≤ 60	t_{mc} + (0 ~ 30)	●	●	●	●
		TUV Specifications	200	80	N/A	N/A	N/A	1.8								
12	THU145-R1N-WGZ	UL/cUL Specifications	270	80	139 ± 4	85	180	N/A	0.4 ± 0.1	10 ~ 15	≤ 60	t_{mc} + (0 ~ 30)	●	●	●	●
		TUV Specifications	270	80	N/A	N/A	N/A	1.8								
24	THU145-R2N-WGZ	UL/cUL Specifications	270	80	139 ± 4	85	180	N/A	1.5 ± 0.3	19 ~ 27	≤ 60	t_{mc} + (0 ~ 30)	●	●	●	●
		TUV Specifications	270	80	N/A	N/A	N/A	1.8								
36	THU145-R4N-WGZ	UL/cUL Specifications	270	80	139 ± 4	85	180	N/A	3.4 ± 0.3	32 ~ 45	≤ 60	t_{mc} + (0 ~ 30)	●	●	●	●
		TUV Specifications	270	80	N/A	N/A	N/A	1.8								
48	THU145-R5N-WGZ	UL/cUL Specifications	270	80	139 ± 4	85	180	N/A	6.0 ± 1.0	40 ~ 60	≤ 60	t_{mc} + (0 ~ 30)	●	●	●	●
		TUV Specifications	270	80	N/A	N/A	N/A	1.8								
72	THU145-R7N-WGZ	UL/cUL Specifications	270	80	139 ± 4	85	180	N/A	12.0 ± 2.0	60 ~ 90	≤ 60	t_{mc} + (0 ~ 30)	●	●	●	●
		TUV Specifications	270	80	N/A	N/A	N/A	1.8								

Note:

1. "●" Means certificated, "○" Means non-certificated.
2. RoHS and REACH Compliant.

All Rights Reserved by Xiamen SET Electronics Co., Ltd. 2024-2026 V1.2

Current-Time Curve (For reference only)

The Current-Time Curve shows functioning time at Multi-times rated current in the condition of the room Temp. 25 °C.

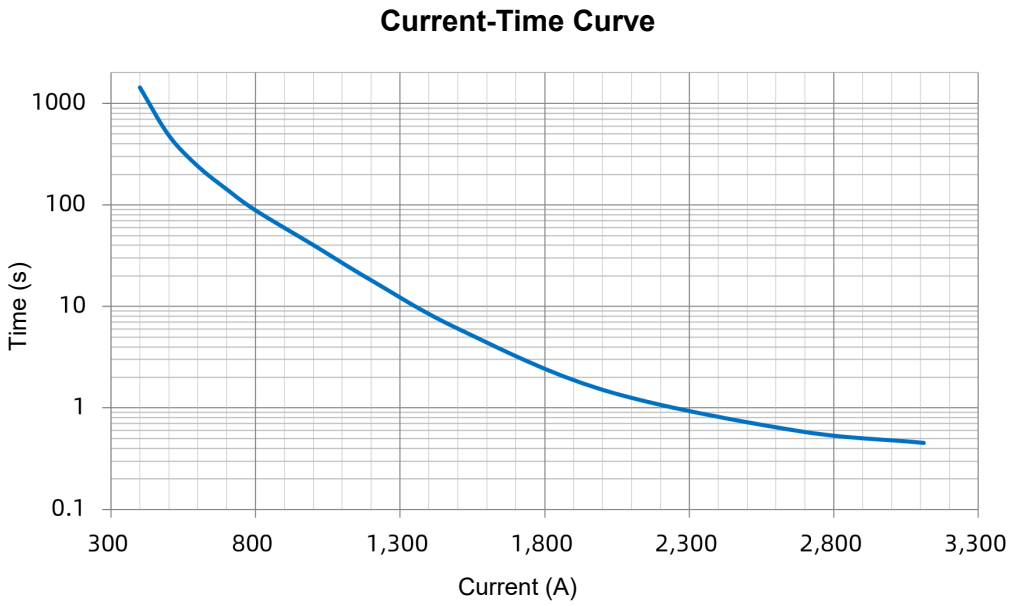

All Rights Reserved by Xiamen SET Electronics Co., Ltd. 2024-2026 V1.2

Packaging Information

Item	PE Bag	Box	Carton
Dimensions (mm)	230 x 90	245 x 165 x 67	370 x 275 x 410
Quantity (PCS)	1	12	120
Gross Weight (kg)			12.2 ± 10%

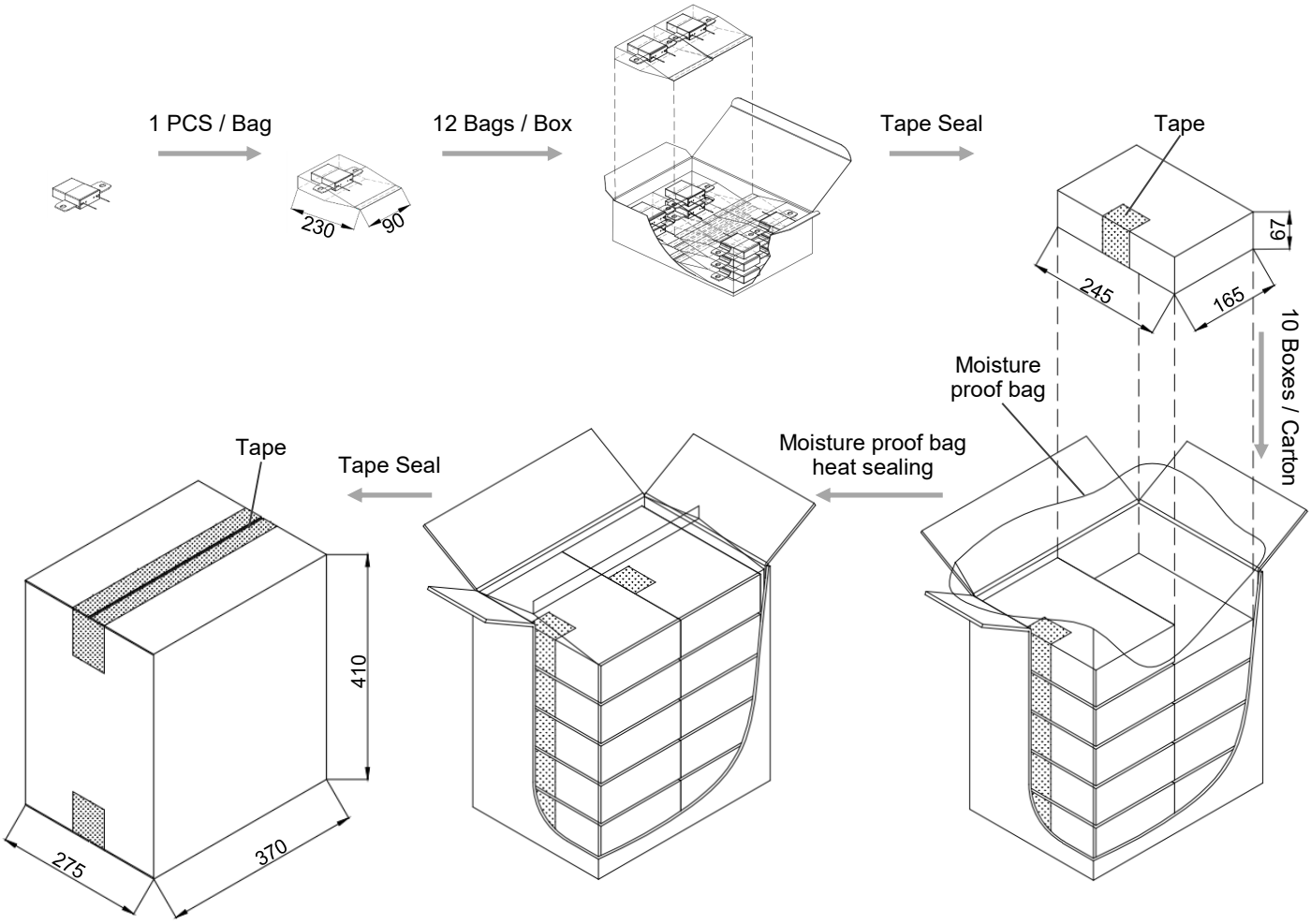

All Rights Reserved by Xiamen SET Electronics Co., Ltd. 2024-2026 V1.2

Glossary

Item	Description
iTCO	**idea Thermal CutOff** Protector that can fuse itself after receiving control signal.
FH	**Feed Heater** Electric appliances that use electric energy to achieve heating effect.
MC	**Main Circuit** All conductive components used in switching devices for closing or disconnecting circuits in a circuit.
CC	**Control Circuit** In addition to the MC, all conductive parts of the switching apparatus used in the access circuit as the closing operation and / or opening operation of the switching apparatus.
I_r	**Rated Current** The current used to classify an idea Thermal CutOff (iTCO) , which is the Maximum current that idea Thermal CutOff (iTCO) allows to carry and is able to cut off the circuit safely.
U_r	**Rated Voltage** The voltage used to classify an idea Thermal CutOff (iTCO) , which is the Maximum voltage that idea Thermal CutOff (iTCO) allows to carry and is able to cut off the circuit safely.
T_f	**Rated Functioning Temp.** The temperature of the Thermal-Link which causes it to change the state of conductivity with a detection current up to 10 mA as the only load. Tolerance: T_f (0 / -10) °C (GB 9816, EN 60691, K60691). Tolerance: T_f ± 7 °C (J60691).
Fusing Temp.	**Fusing Temp.** The temp. of the idea Thermal CutOff (iTCO) which causes it to change its state of conductivity is measured with silicone oil bath in which the temp. is increased at the rate of (0.5 to 1) °C /minutes, with a detection current less than 10 mA as the only load.
T_h	**Holding Temp.** The Maximum temp. at which idea Thermal CutOff (iTCO) will not change its state of conductivity when conducting rated current for 24 h.
T_m	**Maximum Temp. Limit** The temp. of the idea Thermal CutOff (iTCO) stated by the manufacturer, up to which the mechanical and electrical properties of the idea Thermal CutOff (iTCO) having changed its state of conductivity, will not be impaired for a given time.

All Rights Reserved by Xiamen SET Electronics Co., Ltd. 2024-2026 V1.2

ATTENTION

Usage

1. When atmosphere press is from 80 kPa to 106 kPa, the related altitude shall be from –500 m to 2000 m.
2. Operating voltage shall be less than rated voltage of idea Thermal CutOff (iTCO), operating current shall be less than rated current of idea Thermal CutOff (iTCO).
3. Do not touch the idea Thermal CutOff (iTCO) body or electrode lead directly when power is on, to avoid burn or electric shock.

Electrical Connections

Mechanical Connection MC

1. The product surface must not be damaged.
2. If adding terminals to electrode leads, make sure the electrode without grease or other foreign matters, and use the same cross-section connection terminal, otherwise the electrode may heat abnormally.
3. If locking with screw, to prevent loosening, please add gasket and use proper screw when installing the product. Ensure that the screw tightening torque meets the requirements.

All Rights Reserved by Xiamen SET Electronics Co., Ltd. 2024-2026 V1.2

Soldering CC

1. Soldering should be carried out under the soldering conditions listed in table - 1.
2. Feed Heater and remote signal CC, improper soldering operation (too high soldering temperature, too long soldering time, too short lead wire etc.) may cause CC to open in advance.
3. When soldering conditions are more severe than those listed in table - 1, a heat sink fixture should be used between solder point and idea Thermal CutOff (iTCO) body.

Table - 1 Hand - Soldering Time (s)

The Max. Allowable Soldering Time for Different Lead Length (s)						Max. Soldering Temp.
Lead Length	Max. Allowable Soldering Time	Lead Length	Max. Allowable Soldering Time	Lead Length	Max. Allowable Soldering Time	
(mm)	(s)	(mm)	(s)	(mm)	(s)	(°C)
≤ 10	3	10 ~ 20	5	20 ~ 30	5	400

Test Methods

Cold Resistance Test

1. If product TCR is not less than 350 E (-6) / °C and the test ambient Temperature is during 15 °C to 35 °C, the measured resistance value shall be corrected as the relative resistance value under 25 °C according to TCR formula.
2. Resistance measurement (Four - point probe).

Replacement

idea Thermal CutOff (iTCO) is the non-resettable product, for safety sake, please use the same type of idea Thermal CutOff (iTCO) for replacement.

Storage

And idea Thermal CutOff (iTCO) must be kept in a place with no sunshine or no pollution, with temp. (10 to 30) °C and humidity within (30 to 70) %, To avoid influencing the solder-ability of the leads and influencing contact resistance, please use them up within 1 year after receiving the goods.

All Rights Reserved by Xiamen SET Electronics Co., Ltd. 2024-2026 V1.2

idea Thermal CutOff (iTCO) Features & Model List Overview

Rated Functioning Temp. T_f (°C)	TPH150-RxN-JPZ	JS150-RxN-LKZ	JS150-RxN-MKZ	JS150-RxN-PKZ	JS150-RxN-QHZ	JS150-RxN-RHZ
150						
145	○	○	○	○	○	○
136	○	○	○	○	○	○
I_r (A) Rated Current	20	30	40	60	80	100
U_r (VDC) Rated Voltage	400	150			100	
Product Structure	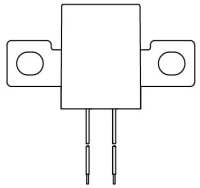 Flat electrode		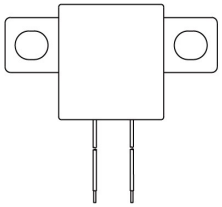 Flat electrode			

Model

Rated Functioning Temp. T_f (°C)	TRR150-RxN-RRZ	TKS150-RxN-SJZ	TKT150-RxN-TJZ	THU145-RxN-UGZ	THU145-RxN-WGZ
150				○	○
145	○	○	○		
136	○	○	○	○	○
I_r (A) Rated Current	100	120	150	200	270
U_r (VDC) Rated Voltage	500	125		80	
Product Structure	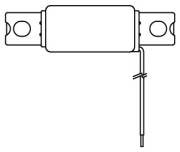 Flat electrode	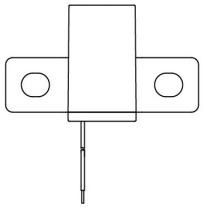 Flat electrode		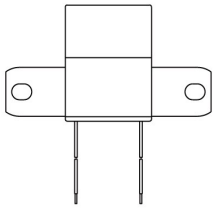 Flat electrode	

Model

All Rights Reserved by Xiamen SET Electronics Co., Ltd. 2024-2026 V1.2