# DC-ATCO

## *Thermal-Link*

- Rated Current: (10~200) A
- Rated Voltage: (60 ~ 850) VDC
- Functioning Temperature: (76 ~ 230) ℃
- Low Impedance, Low Power Consumption
- Non-Resettable
- Over Temp. Protection
- Superior Vibration Resistance
- Meet the Requirements of Vehicle Prohibited Substances

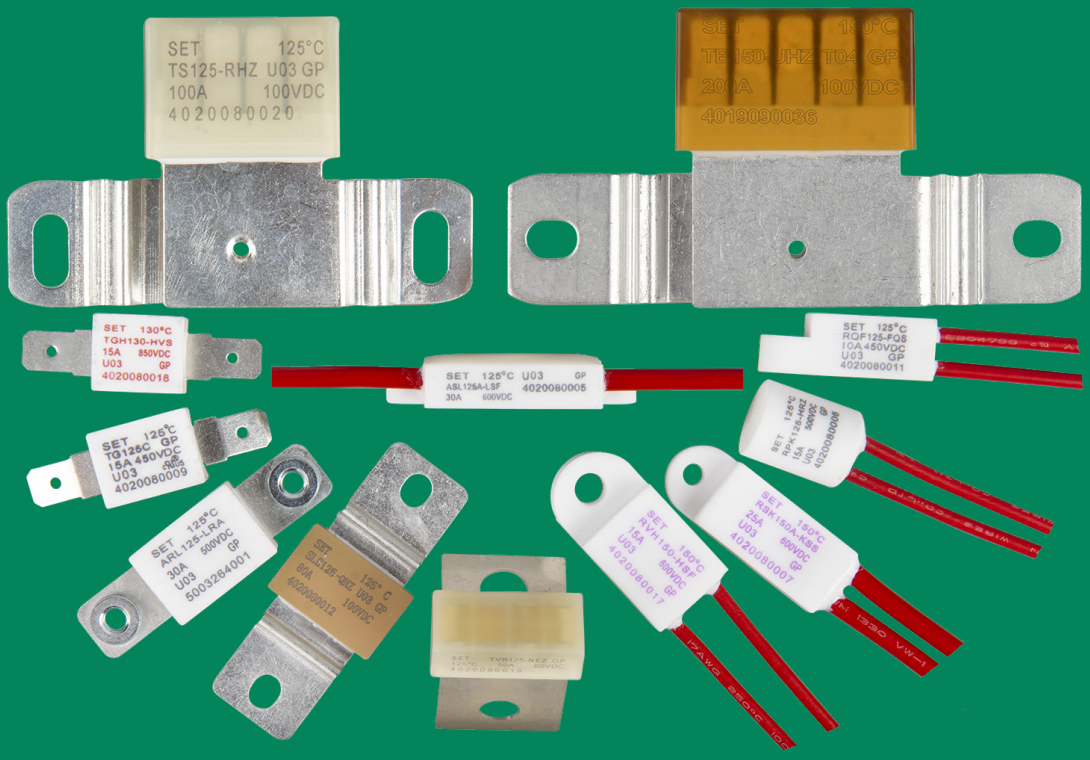


SET safe | SET fuse

Providing a Total Solution for High Standard Safety Circuit Protection

# DC-ATCO

## DC-Alloy Thermal-Link



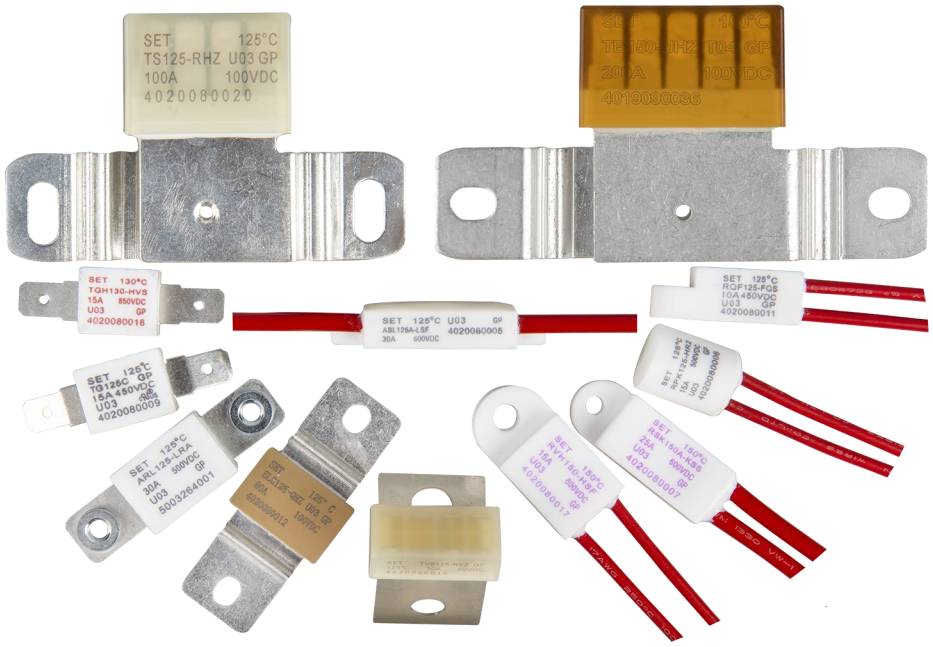


DC-ATCO

## Features

Low Impedance, Low Power Consumption

Non-Resettable

Over Temp. Protection

Superior Vibration Resistance

RoHS & REACH Compliant

Rated Current：(10 to 200) A

Rated Voltage: (60 to 850 ) VDC

Rated Functioning Temp.：(76 to 230）℃

Patented product



All Rights Reserved by Xiamen SET Electronics Co., Ltd. 2021-2023 V2.0

+86-592-571-5838 www.SETfuse.com www.SETsafe.com E-mail : sales@SETfuse.com

## Thermal-Link (DC-ATCO) Features & Model List Overview

| Rated Functioning Temp. $T_f$ (°C) | Page | Model | | | | | | |
|---|---|---|---|---|---|---|---|---|
| 200 | ○ | ○ | ○ | ○ | ○ | ○ | ○ | |
| 187 | ○ | RQF187-FQS | ○ | ○ | RSK187A-KSS | ARL187-LRA | RVH187-HSF | |
| 160 | ○ | ○ | ○ | ○ | ○ | ○ | ○ | |
| 150 | TG150C-JPZ | RQF150-FQS | TG150C-HQZ | RPK150-HRZ | RSK150A-KSS | ARL150-LRA | RVH150-HSF | |
| 145 | ○ | ○ | ○ | ○ | ○ | ○ | ○ | |
| 139 | ○ | ○ | ○ | ○ | ○ | ○ | ○ | |
| 136 | TG136C-JPZ | RQF136-FQS | TG136C-HQZ | RPK136-HRZ | RSK136A-KSS | ARL136-LRA | RVH136-HSF | |
| 135 | ○ | ○ | ○ | ○ | ○ | ○ | ○ | |
| 133 | ○ | ○ | ○ | ○ | ○ | ○ | ○ | |
| 130 | ○ | RQF130-FQS | ○ | ○ | ○ | ○ | RVH130-HSF | |
| 125 | TG125C-JPZ | RQF125-FQS | TG125C-HQZ | RPK125-HRZ | RSK125A-KSS | ARL125-LRA | RVH125-HSF | |
| 123 | ○ | ○ | ○ | ○ | ○ | ○ | ○ | |
| 120 | ○ | ○ | ○ | ○ | ○ | ○ | ○ | |
| 115 | TG115C-JPZ | RQF115-FQS | TG115C-HQZ | RPK115-HRZ | RSK115A-KSS | ARL115-LRA | RVH115-HSF | |
| 105 | ○ | ○ | ○ | ○ | ○ | ○ | ○ | |
| 102 | TG102C-JPZ | RQF102-FQS | TG102C-HQZ | RPK102-HRZ | RSK102A-KSS | ARL102-LRA | RVH102-HSF | |
| 97 | ○ | ○ | ○ | ○ | ○ | ○ | ○ | |
| 95 | ○ | ○ | ○ | ○ | ○ | ○ | ○ | |
| 86 | ○ | RQF86-FQS | TG86C-HQZ | ○ | ○ | ARL86-LRA | ○ | |
| 76 | ○ | ○ | ○ | ○ | ○ | ○ | ○ | |
| $I_{r(A)}$ Rated Current | 20 | 10 | 15 | 15 | 25 | 30 | 15 | |
| $U_{r(VDC)}$ Rated Voltage | 400 | 450 | | 500 | 600 | 500 | 600 | |
| Product Structure | | | 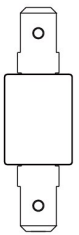 | 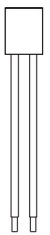 | 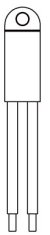 | | 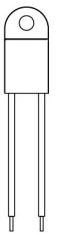 | |
| | Axial Shape | Radial Shape | Axial Shape | Radial Shape | | Axial Shape | Radial Shape | |

All Rights Reserved by Xiamen SET Electronics Co., Ltd. 2021-2023 V2.0

## Thermal-Link (DC-ATCO) Features & Model List Overview

| Rated Functioning Temp. $T_f$ (°C) | Page | Model | | | | | | | |
|---|---|---|---|---|---|---|---|---|---|
| 200 | ○ | ○ | ○ | ○ | ○ | ○ | ○ | ○ | |
| 187 | ASL187A-LSF | TGH187-HVS | ○ | ○ | ○ | ○ | ○ | ○ | |
| 160 | ○ | ○ | ○ | ○ | ○ | ○ | ○ | ○ | |
| 150 | ASL150A-LSF | TGH150-HVS | ○ | TG150C-JSZ | ○ | ○ | ○ | ○ | |
| 145 | ○ | ○ | ○ | ○ | ○ | ○ | ○ | ○ | |
| 139 | ○ | ○ | ○ | ○ | ○ | ○ | ○ | ○ | |
| 136 | ASL136A-LSF | TGH136-HVS | ○ | TG136C-JSZ | TB136-UHZ | TS136-RHZ | TB136-UJZ | TS136-RJZ | |
| 135 | ○ | ○ | ○ | ○ | ○ | ○ | ○ | ○ | |
| 133 | ○ | ○ | ○ | ○ | ○ | ○ | ○ | ○ | |
| 130 | ○ | TGH130-HVS | ○ | ○ | TB130-UHZ | ○ | TB130-UJZ | ○ | |
| 125 | ASL125A-LSF | TGH125-HVS | ○ | TG125C-JSZ | TB125-UHZ | TS125-RHZ | TB125-UJZ | TS125-RJZ | |
| 123 | ○ | ○ | ○ | ○ | ○ | ○ | ○ | ○ | |
| 120 | ○ | ○ | ○ | ○ | ○ | ○ | ○ | ○ | |
| 115 | ASL115A-LSF | TGH115-HVS | ○ | TG115C-JSZ | TB115-UHZ | TS115-RHZ | TB115-UJZ | TS115-RJZ | |
| 105 | ○ | ○ | ○ | ○ | ○ | ○ | ○ | ○ | |
| 102 | ASL102A-LSF | TGH102-HVS | ○ | TG102C-JSZ | TB102-UHZ | TS102-RHZ | TB102-UJZ | TS102-RJZ | |
| 97 | ○ | ○ | ○ | ○ | ○ | ○ | ○ | ○ | |
| 95 | ○ | ○ | ○ | ○ | ○ | ○ | ○ | ○ | |
| 86 | ○ | ○ | TG86C-HSZ | ○ | ○ | ○ | ○ | ○ | |
| 76 | ○ | ○ | ○ | ○ | ○ | ○ | ○ | ○ | |
| $I_{r(A)}$ Rated Current | 30 | 15 | 15 | 20 | 200 | 100 | 200 | 100 | |
| $U_{r(VDC),(VAC)}$ Rated Voltage | 600 (VDC) | 850 (VDC) | 600 (VAC) | | 100 (VDC) | | 125 (VAC) | | |
| Product Structure | | | 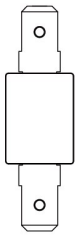 | | 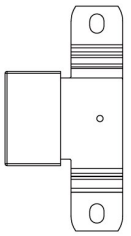 | 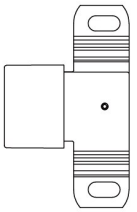 | 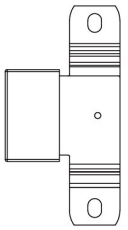 | 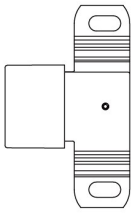 | |
| | Radial Shape | Axial Shape | | | Radial Shape | | | | |

+86-592-571-5838 www.SETfuse.com www.SETsafe.com E-mail : sales@SETfuse.com

All Rights Reserved by Xiamen SET Electronics Co., Ltd. 2021-2023 V2.0

# DC-ATCO

**DC-Alloy Thermal-Link**



## Description

DC-Alloy Thermal-Link / DC-Alloy Thermal Cutoff (DC-ATCO) is defined as a non-resettable protective device functioning one time only. It is widely used in electrical equipment and electric vehicle. DC-ATCO is mainly consist of Thermal Element, Flux Resin, Case, Sealant and Lead Wires. Normally, thermal element is jointed to the two lead wires. Under abnormal conditions, when the temp. reaches to the fusing temp. of DC-ATCO, the thermal element melts and quickly retracts to the two lead wire ends with the aid of the flux resin and disconnects the circuit completely. SETsafe | SETfuse DC-Alloy Thermal-Link is classified into Axial and Radial shapes, with Rated Current 10 A to 200 A, Rated Functioning Temp. 76 °C to 230 °C, with UL, cUL Approvals and RoHS, REACH compliant.

DC-ATCO

## Structure

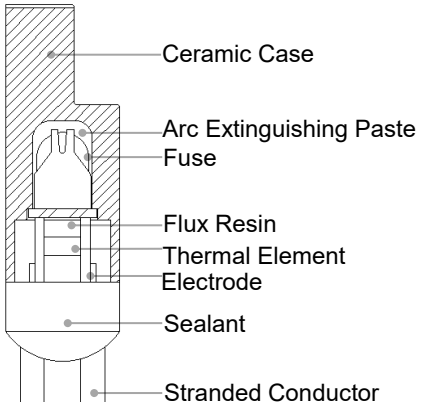


Axial Shape

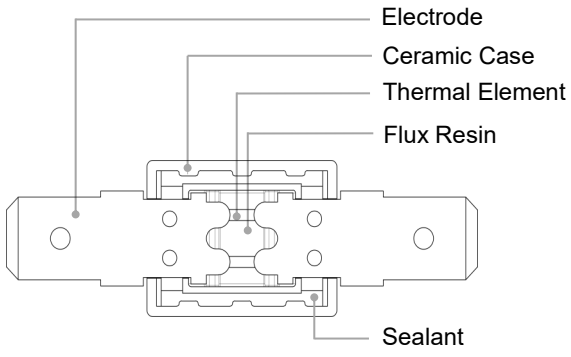


Radial Shape

## Marking

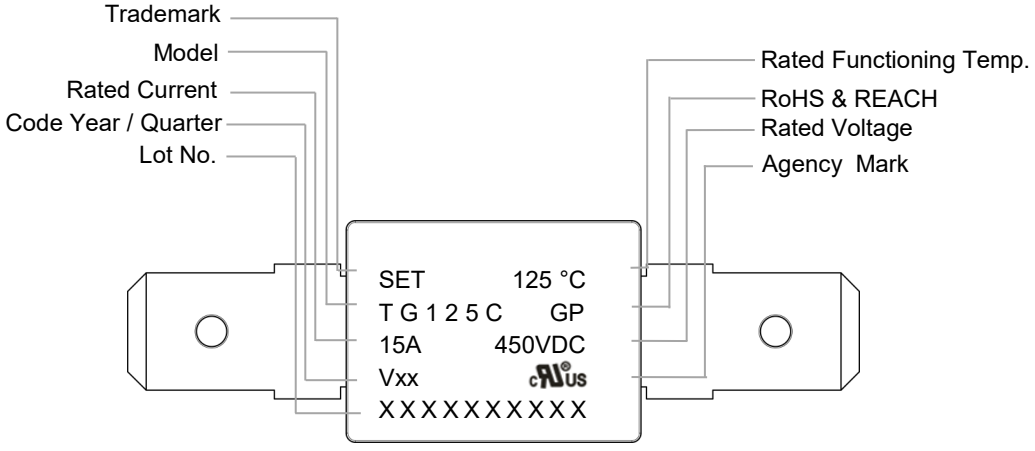




All Rights Reserved by Xiamen SET Electronics Co., Ltd. 2021-2023 V2.0

# DC-ATCO
DC-Alloy Thermal-Link



## Part Number System

DC-ATCO-TG125C - H Q Z

**Minimum Breaking Current (A)**
Z:Without Inbuilt Fuse

**Rated Voltage and Rated Current**

| | | | |
|---|---|---|---|
| HQ: | 15 A | 450 VDC | |
| JP: | 20 A | 400 VDC | (Just for 102 ºC to 150 ºC) |
| HS: | 15 A | 600 VAC | (Just for 86 ºC) |
| JS: | 20 A | 600 VAC | (Just for 102 ºC to 150 ºC) |

**Functioning Temp. (ºC)**
86
102
115
125
136
150

**Series**
TGxxxC

**Product Category**
DC-Alloy Thermal-Link

DC-ATCO


All Rights Reserved by Xiamen SET Electronics Co., Ltd. 2021-2023 V2.0

## Glossary

| Item | Description |
|---|---|
| **TCO** | **Thermal-Link**<br>A non-resettable device incorporating a THERMAL ELEMENT which will open a circuit once only when exposed for a sufficient length of time to a temperature in excess of that for which it has been designed. |
| **ATCO** | **Alloy Thermal-Link**<br>Alloy Type Thermal-Link, Alloy is the thermal element. |
| **DC-ATCO** | **DC-Alloy Thermal-Link**<br>Direct Current Alloy Thermal-Link. |
| $T_f$ | **Rated Functioning Temp.**<br>The temperature of the Thermal-Link which causes it to change the state of conductivity with a detection current up to 10 mA as the only load.<br>Tolerance: $T_f$ 0 / -10 °C (GB 9816, EN 60691, K60691).<br>Tolerance: $T_f \pm 7$ °C (J60691). |
| **Fusing Temp.** | **Fusing Temp.**<br>The temperature of the Alloy Thermal-Link which causes it to change its state of conductivity is measured with silicone oil bath in which the temperature is increased at the rate of 0.5 °C to 1 °C / minute, with a detection current up to 10 mA as the only load. |
| $T_h$ | **Holding Temp.**<br>The Maximum temperature at which a Thermal-Link will not change its state of conductivity when conducting rated current for 168 hours. |
| $T_m$ | **Maximum Temp. Limit**<br>The temperature of the Thermal-Link stated by the manufacturer, up to which the mechanical and electrical properties of the Thermal-Link having changed its state of conductivity, will not be impaired for a given time. |
| $I_{min}$ | **Minimum Breaking Current**<br>The minimum current that Fuse requires after the Alloy of Thermal-Link opens in the circuit. |
| $I_r$ | **Rated Current**<br>The current used to classify a Thermal-Link, which is the maximum current that Thermal-Link allows to carry and is able to cut off the circuit safely. |
| $U_r$ | **Rated Voltage**<br>The voltage used to classify a Thermal-Link, which is the maximum voltage that Thermal-link allows to carry and is able to cut off the circuit safely. |


All Rights Reserved by Xiamen SET Electronics Co., Ltd. 2021-2023 V2.0

# DC-ATCO

DC-Alloy Thermal-Link



DC-ATCO

# ATTENTION

## Usage

1. When atmosphere pressure is from 80 kPa to 106 kPa, the related altitude shall be from +2000 m to - 500 m.
2. Operating voltage less than rated voltage of DC-ATCO, operating current less than rated current of DC-ATCO.
3. Do not touch the DC-ATCO body or lead wires directly when power is on, to avoid burn or electric shock.

## Replacement

DC-ATCO is a non-repairable product. For safety sake, it shall be replaced by an equivalent DC-ATCO from the same manufacturer, and mounted in the same way.

## Storage

Do not store the DC-ATCO at the high temp., high humidity or corrosive gas environment. The product shall be stored at 25 ± 5 °C and ≤ 70% RH, avoid direct sunlight and shall use them up within 1 year after receiving the goods.

## Installation

### Make Sure the Temp. of Installation Position

1. It is recommended that a dummy DC-ATCO with inbuilt thermo-couple shall be used to determine the proper temp.
2. The terminal product should be tested to ensure that potential abnormal conditions do not cause ambient temp. to exceed the $T_m$ of the DC-ATCO.
3. Mount the DC-ATCO at the location where Temp. rises evenly.



All Rights Reserved by Xiamen SET Electronics Co., Ltd. 2021-2023 V2.0

**Installation position of mechanical performance requirements.**

1. Ensure that the electrode lead is long enough, and avoid actions such as press, tensile or twist.
2. The seal or body of DC-ATCO must not be damaged, burned or over heated.



## Mechanical Connection

### Riveting

Suitable for the stranded conductor diameter (d) of DC-ATCO ≥1.2 mm.

1. Choose small resistivity riveting material and be riveted.
2. A flexible lead or lead with low resistance should be used to rivet the DC-ATCO.
3. Contact resistance should be minimal, Large contact resistance will lead to higher temp., DC-ATCO Functioning in advance.

DC-ATCO

## Soldering

### Hand-Soldering

1. Soldering should be carried out according to Table -1.
2. The thermal element of DC-ATCO is thermal element with low melting point, which is jointed with DC-ATCO electrode lead. Improper soldering operation (too high soldering temp., too long soldering time etc.) may transfer more heat to the thermal element and DC-ATCO may open in advance.
3. When soldering conditions are more severe than those listed in Table -1, a heat sink fixture should be used between soldering point and DC-ATCO body.
4. When soldering, please do not pull / push or twist DC-ATCO body or stranded conductor.
5. After soldering, let it naturally cool for longer than 20 sec. During cooling, never move the DC-ATCO body or stranded conductor.

**TABLE -1** Hand-Soldering Time

| Rated Functioning Temp. ($T_f$) | Max. Allowable Soldering Time for Different Stranded Conductor Length (Fig.-1) | | | | | | Max. Soldering Temp. |
|---|---|---|---|---|---|---|---|
| | $L_5$ Length | Time | $L_5$ Length | Time | $L_5$ Length | Time | |
| (°C) | (mm) | (s) | (mm) | (s) | (mm) | (s) | (°C) |
| 76 ~ 101 | 10 | 1[a] | 20 | 2 | 30 | 3 | 400 |
| 102 ~ 115 | 10 | 1[a] | 20 | 2 | 30 | 3 | |
| 116 ~ 135 | 10 | 1[a] | 20 | 3 | 30 | 5 | |
| 136 ~ 150 | 10 | 3 | 20 | 5 | 30 | 5 | |
| 151 ~ 230 | 10 | 4 | 20 | 6 | 30 | 7 | |


All Rights Reserved by Xiamen SET Electronics Co., Ltd. 2021-2023 V2.0

Note:

a: Auxiliary Heat Sink Fixture is Required to Avoid DC-ATCO Cutting off Unexpectedly.

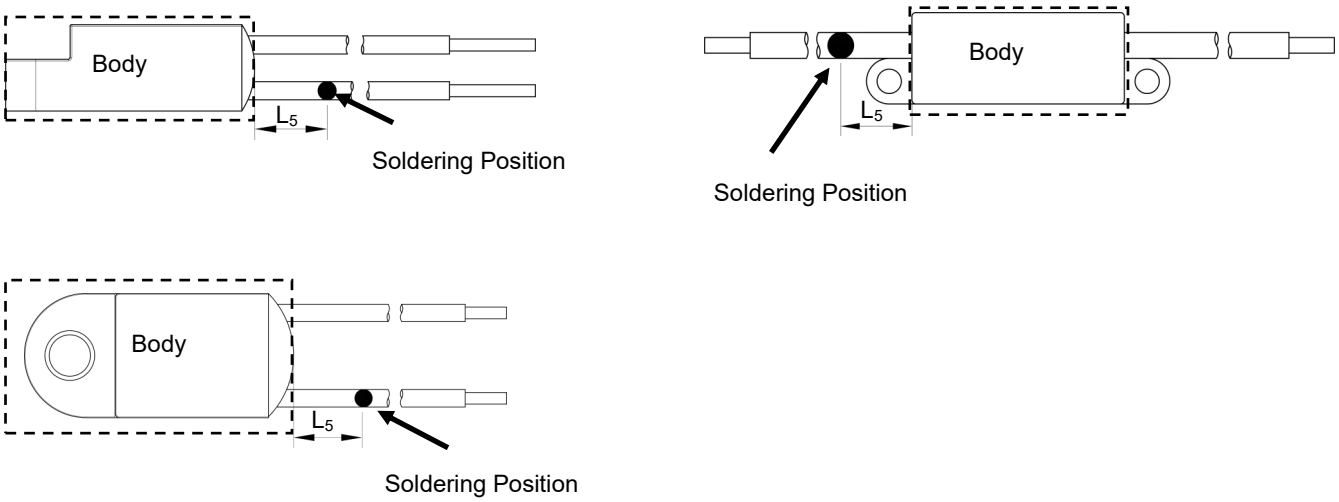


**FIGURE -1**

## Stranded Conductor Forming

1. If stranded conductor has to be bent, please pay attention to the distance between body and bending point. Refer to the following table.
2. When bending stranded conductor, please use pincher or similar tools to fix the product as shown in Figure -2, to avoid damaging the product. The distance $L_6$ between the bending position and DC-ATCO sealing end should refer to Table -2.
3. During forming and mounting, stranded conductor should not be cut, nicked, bent sharply, to avoid breaking the product.
4. Tangential forces on the stranded conductor must be avoided (i.e. pushing or pulling on the stranded conductor at angle to DC-ATCO body) as such forces may damage the seal of DC-ATCO.
5. Bending radius R: ≥ 15d, as shown in Figure -2.

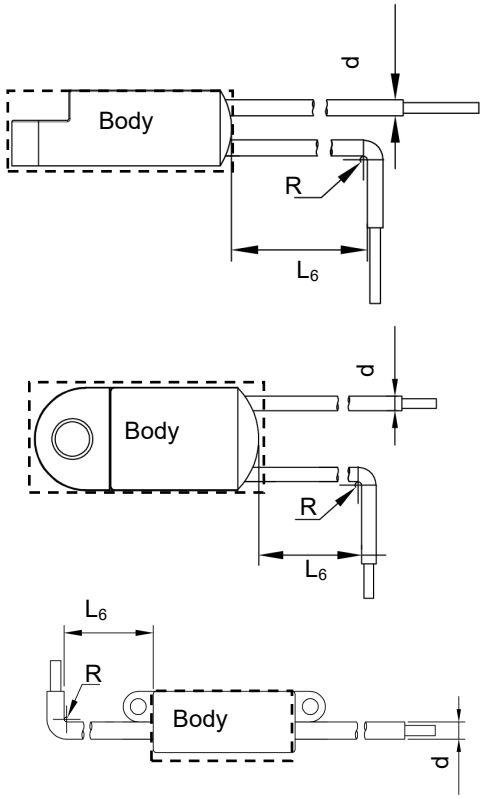


**FIGURE -2**

**TABLE - 2 Distance between Body and Bending Point**

| d (mm) | ≤ 1.0 | 1.0 - 1.2 | > 1.2 |
|---|---|---|---|
| $L_6$ (mm) | ≥ 3 | ≥ 5 | ≥ 10 |


All Rights Reserved by Xiamen SET Electronics Co., Ltd. 2021-2023 V2.0

# DC-ATCO

DC-Alloy Thermal-Link



## Patents

| Name | Region | Category |
|---|---|---|
| Thermal-Link | China | Utility Model |
| Thermal-Link | China | Utility Model |
| A High-voltage fuse device | China | Utility Model |
| A high-current thermal Link | China | Utility Model |
| A high-voltage fuse | China | Utility Model |
| A thermal fuse with arc extinguishing medium | China | Utility Model |
| A high-voltage direct current cut-off device | China | Utility Model |
| A high-voltage direct current thermal Link | China | Utility Model |
| A laminated type temperature safety device | China | Utility Model |
| A high-voltage direct current temperature fuse | China | Utility Model |

DC-ATCO



All Rights Reserved by Xiamen SET Electronics Co., Ltd. 2021-2023 V2.0

# DC-ATCO

DC-Alloy Thermal-Link

TGH Series $I_r$: 15 A

## Features

- Operating Voltage
- High Accuracy of Functioning Temp.
- Ceramic Case
- Non-Resettable
- RoHS & REACH Compliant

## Applications

- Battery Cooling Systems
- Pre-charged Resistors
- Automotive Air-Conditioners
- Heaters

## Customization

- Rated Functioning Temp.
- The Shape of Electrode

## Structure Diagram

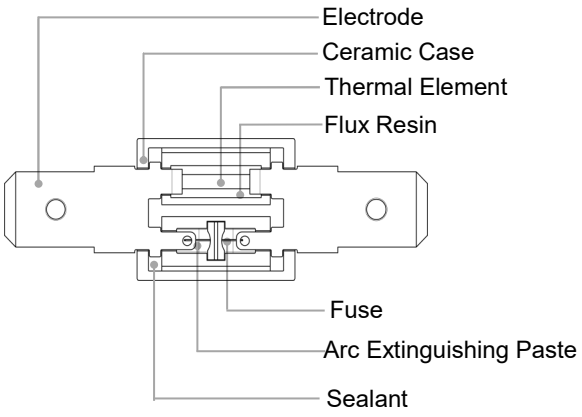


## Product Schematic

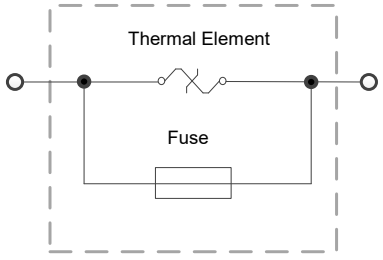


## Agency Approvals

| Agency Mark | Standards | File No. |
|---|---|---|
| | UL60691 | On-going |
| | CAN-CSA-E60691 | On-going |



All Rights Reserved by Xiamen SET Electronics Co., Ltd. 2021-2023 V2.0

# DC-ATCO
DC-Alloy Thermal-Link

TGH Series $I_r$: 15 A



## Dimensions (mm)

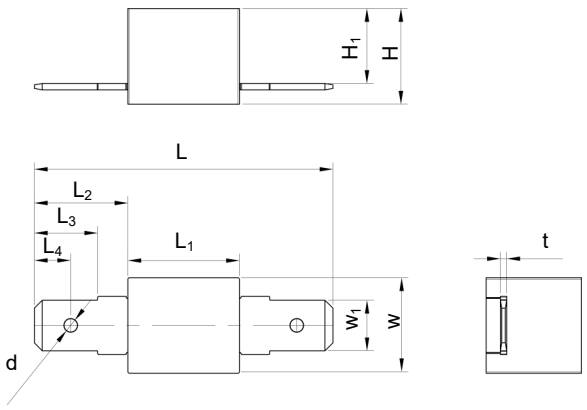


| L | $L_1$ | $L_2$ | $L_3$ | $L_4$ | W | $W_1$ | H | $H_1$ | t | D |
|---|---|---|---|---|---|---|---|---|---|---|
| 37.5 ± 2.0 | 14.0 ± 1.0 | 11.75 ± 0.30 | 7.95 ± 0.30 | 4.55 ± 0.2 | 12.0 ± 1.0 | 6.35 ± 0.20 | $12.0^{+0.8}_{-0.5}$ | $9.4^{+1.0}_{-0.0}$ | 0.80 ± 0.05 | 1.65 ± 0.20 |

## Specifications

For Automotive Application: Battery Cooling System, Pre-charged Resistor, Automotive Air Conditioning

| Model | $T_f$ | Fusing Temp. with Load | $T_h$ | $T_m$ | $I_{min}$ | $I_r$ | $U_r$ | UL | cUL | TUV | VDE | CCC | RoHS REACH |
|---|---|---|---|---|---|---|---|---|---|---|---|---|---|
| | (°C) | (°C) | (°C) | (°C) | (A) | (A) | (V) | UL | cUL | TUV | VDE | CCC | |
| TGH102-HVS | 102 | 92 ± 3 | 63 | 250 | 3 | 15 | DC 850 | ○ | ○ | ○ | ○ | ○ | ● |
| TGH115-HVS | 115 | 107 ± 3 | 65 | 250 | 3 | 15 | DC 850 | ○ | ○ | ○ | ○ | ○ | ● |
| TGH125-HVS | 125 | 107 ± 3 | 75 | 250 | 3 | 15 | DC 850 | ○ | ○ | ○ | ○ | ○ | ● |
| TGH130-HVS | 130 | 108 ± 3 | 80 | 250 | 3 | 15 | DC 850 | ○ | ○ | ○ | ○ | ○ | ● |
| TGH136-HVS | 136 | 109 ± 3 | 80 | 250 | 3 | 15 | DC 850 | ○ | ○ | ○ | ○ | ○ | ● |
| TGH150-HVS | 150 | 135 ± 3 | 105 | 250 | 3 | 15 | DC 850 | ○ | ○ | ○ | ○ | ○ | ● |
| TGH187-HVS | 187 | 180 ± 3 | 155 | 250 | 3 | 15 | DC 850 | ○ | ○ | ○ | ○ | ○ | ● |



All Rights Reserved by Xiamen SET Electronics Co., Ltd. 2021-2023 V2.0

## Temp.-Time Curve

The functioning temperature time curve of Alloy Thermal-Link in different Temp. oil bath. (This curve is for reference only)

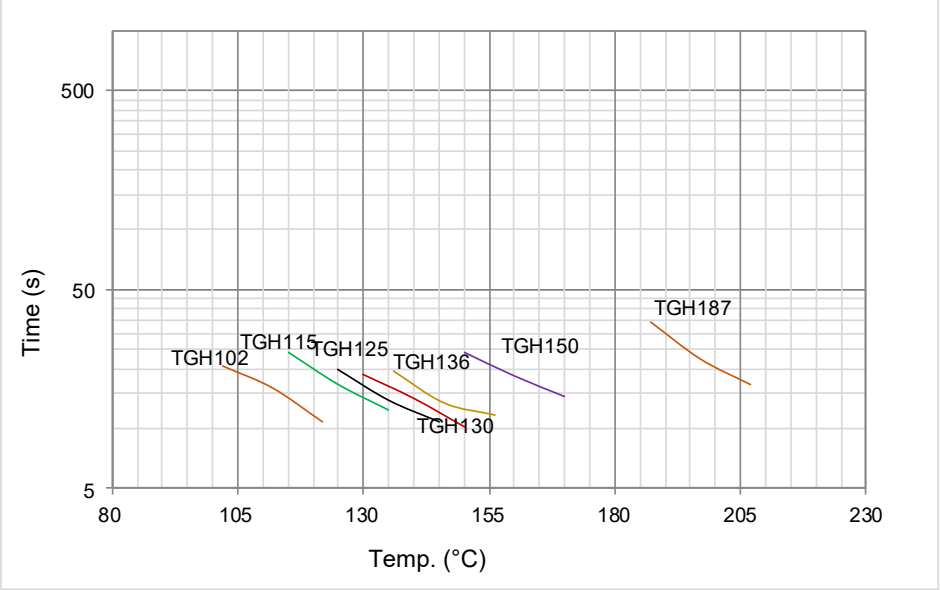


## Current-Time Curve

This is an illustrated curve, describing the opening time at Multi-times rated current in the condition of the room Temp. 25 °C. (This curve is for reference only)

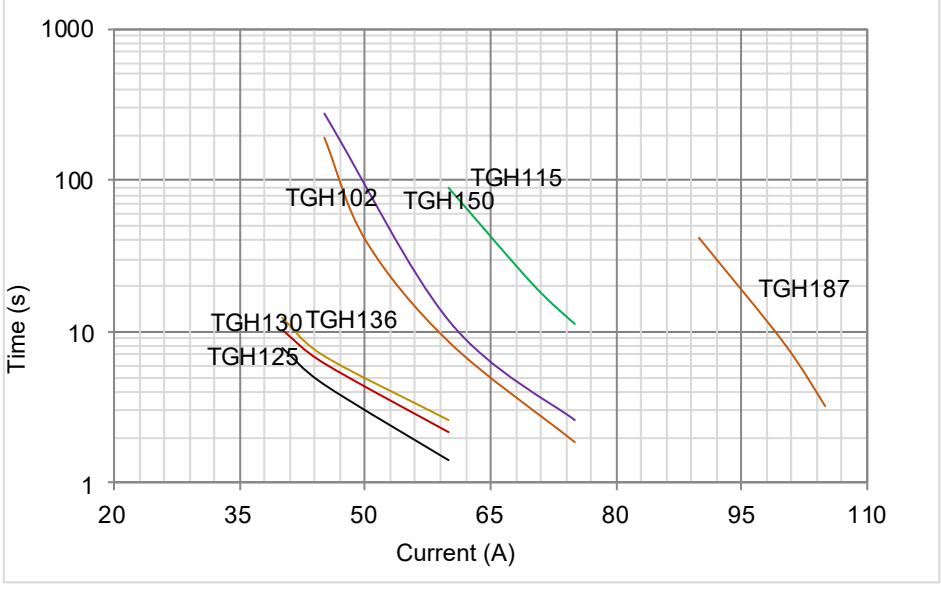



All Rights Reserved by Xiamen SET Electronics Co., Ltd. 2021-2023 V2.0

## Packaging Information

| Item | Tray | PE Bag | Carton |
|---|---|---|---|
| Dimensions (mm) | 295 x 217 x 16 | 295 x 217 x 60 | 455 x 315 x 285 |
| Quantity (PCS) | 70 | 280 | 2240 |
| Gross Weight (kg): | | | 20 ± 10% |

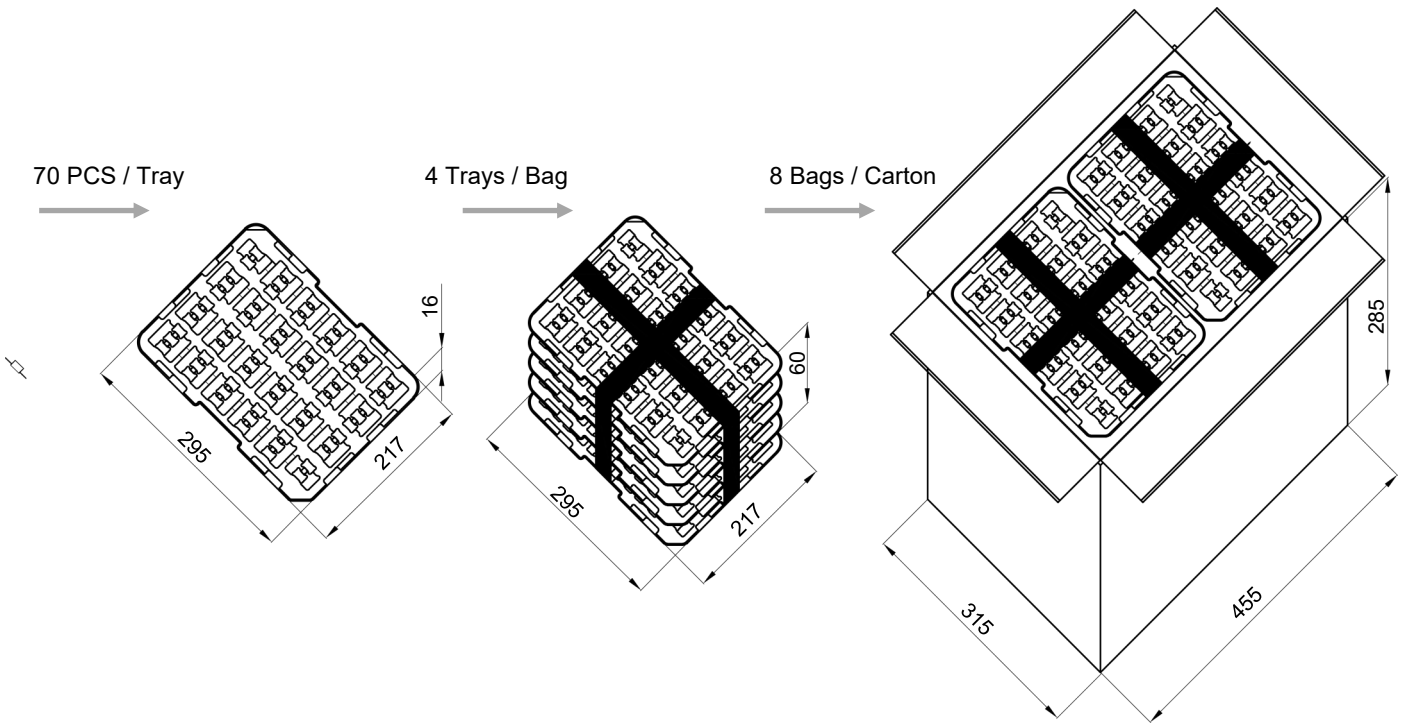



All Rights Reserved by Xiamen SET Electronics Co., Ltd. 2021-2023 V2.0

# DC-ATCO

DC-Alloy Thermal-Link

RSKxxxA Series $I_r$: 25 A



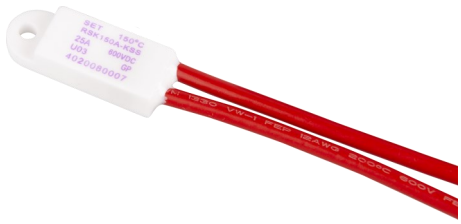

## Features

- Operating Voltage
- High Accuracy of Functioning Temp.
- Ceramic Case
- Non-Resettable
- RoHS & REACH Compliant

## Structure Diagram

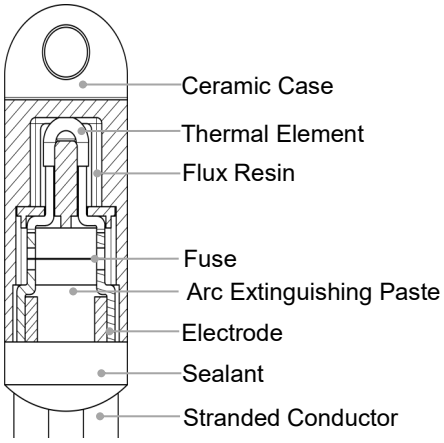


## Applications

- Battery Cooling Systems
- Pre-charged Resistors
- Automotive Air-Conditioners
- Heaters

## Customization

- Rated Functioning Temp.
- The Shape of Stranded Conductor

## Product Schematic

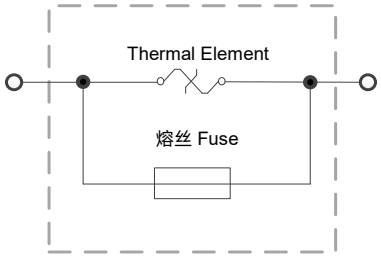


## Agency Approvals

| Agency Mark | Standards | File No. |
|---|---|---|
| ® | UL60691 | On-going |
| c ® | CAN-CSA-E60691 | On-going |



All Rights Reserved by Xiamen SET Electronics Co., Ltd. 2021-2023 V2.0

# DC-ATCO
DC-Alloy Thermal-Link

RSKxxxA Series $I_r$: 25 A



## Dimensions (mm)

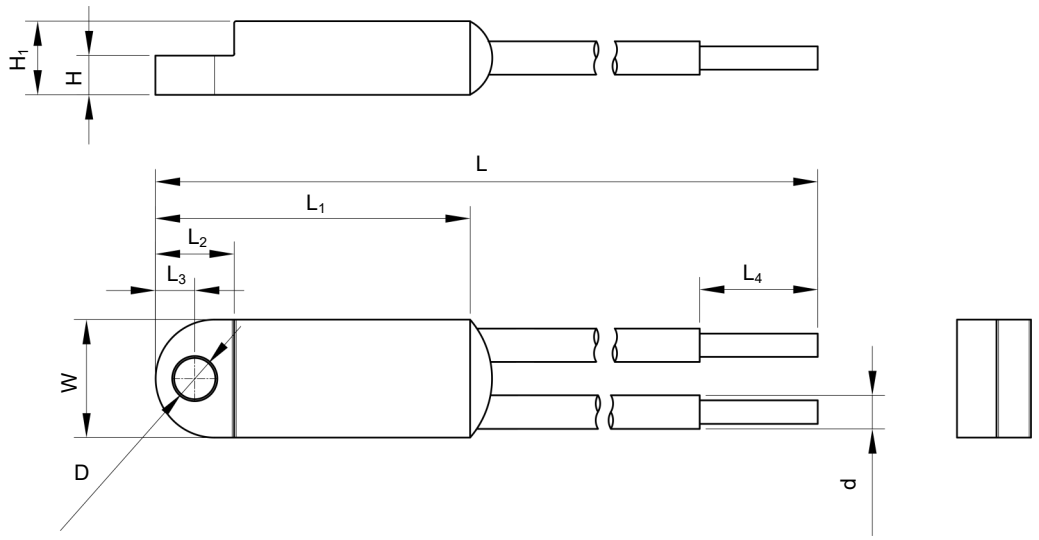


| L | $L_1$ | $L_2$ | $L_3$ | $L_4$ | W | H | $H_1$ | D | d |
|---|---|---|---|---|---|---|---|---|---|
| 132.0 ± 5.0 | 32.0 ± 1.0 | 8.00 ± 0.5 | 4.0 ± 0.5 | 10.0 ± 1.0 | 12.0 ± 1.0 | 4.0 ± 0.5 | 7.5 ± 1.0 | 4.2 ± 0.5 | AWG12 |

## Specifications

| Model | $T_f$ | Fusing Temp. with Load | $T_h$ | $T_m$ | $I_{min}$ | $I_r$ | $U_r$ | UL | cUL | TUV | VDE | CCC | RoHS REACH |
|---|---|---|---|---|---|---|---|---|---|---|---|---|---|
| | (°C) | (°C) | (°C) | (°C) | (A) | (A) | (V) | UL | cUL | TUV | VDE | CCC | |
| RSK102A-KSS | 102 | 82 ± 3 | 55 | 250 | 3.0 | 25 | DC 600 | ○ | ○ | ○ | ○ | ○ | ● |
| RSK115A-KSS | 115 | 95 ± 3 | 65 | 250 | 3.0 | 25 | DC 600 | ○ | ○ | ○ | ○ | ○ | ● |
| RSK125A-KSS | 125 | 105 ± 3 | 70 | 250 | 3.0 | 25 | DC 600 | ○ | ○ | ○ | ○ | ○ | ● |
| RSK136A-KSS | 135 | 116 ± 3 | 80 | 250 | 3.0 | 25 | DC 600 | ○ | ○ | ○ | ○ | ○ | ● |
| RSK150A-KSS | 150 | 130 ± 3 | 95 | 250 | 3.0 | 25 | DC 600 | ○ | ○ | ○ | ○ | ○ | ● |
| RSK187A-KSS | 187 | 167 ± 3 | 140 | 250 | 3.0 | 25 | DC 600 | ○ | ○ | ○ | ○ | ○ | ● |



All Rights Reserved by Xiamen SET Electronics Co., Ltd. 2021-2023 V2.0

## Temp.-Time Curve

The functioning temperature time curve of Alloy Thermal-Link in different Temp. oil bath. (This curve is for reference only)

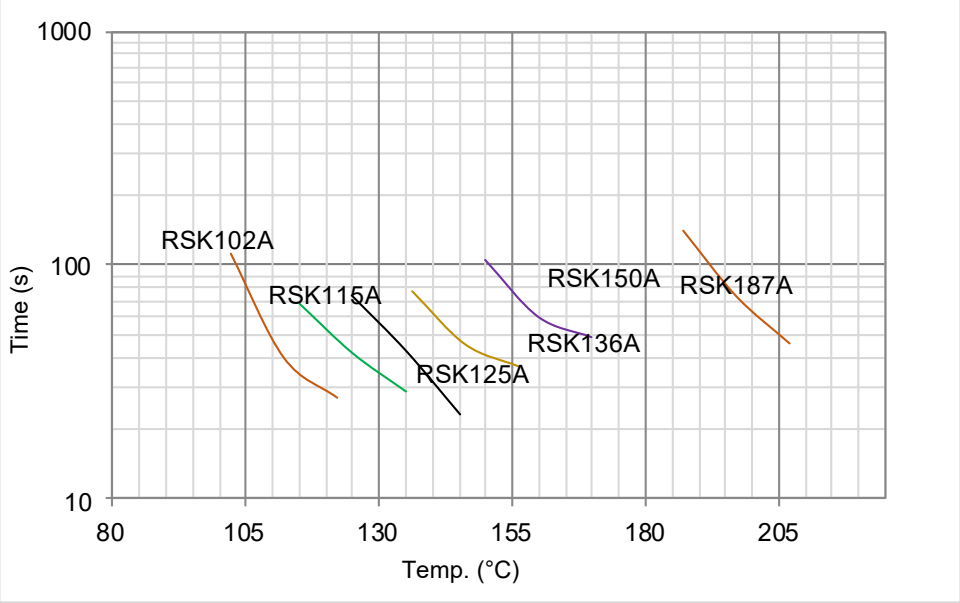


## Current-Time Curve

This is an illustrated curve, describing the opening time at Multi-times rated current in the condition of the room Temp. 25 °C. (This curve is for reference only)

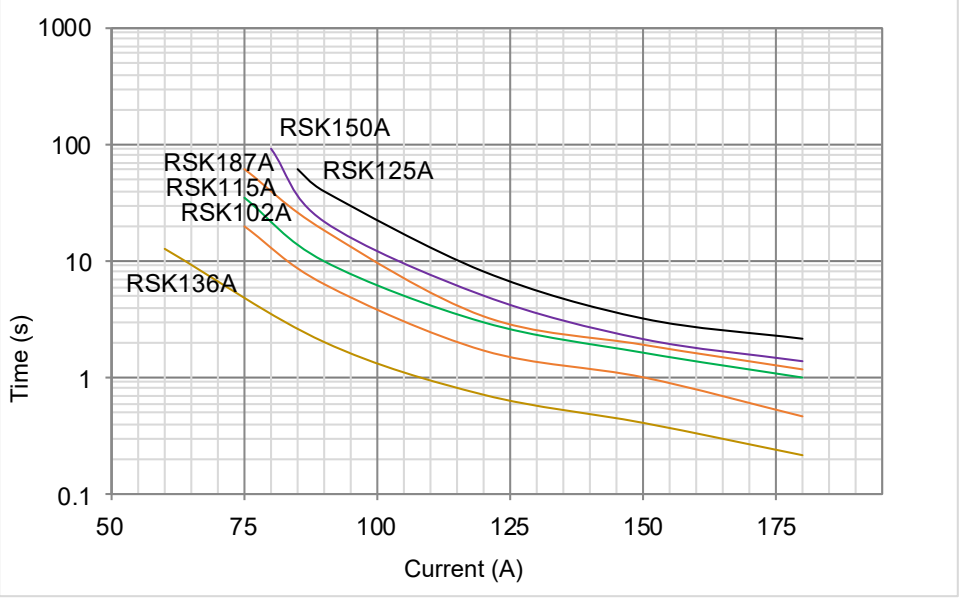



All Rights Reserved by Xiamen SET Electronics Co., Ltd. 2021-2023 V2.0

## Packaging Information

| Item | Tray | Box | Carton |
|---|---|---|---|
| Dimensions (mm) | 422 x 122 x 15.3 | 429 x 85 x 131 | 455 x 315 x 285 |
| Quantity (PCS) | 20 | 100 | 600 |
| Gross Weight (kg): | | | 20 ± 10% |



DC-ATCO

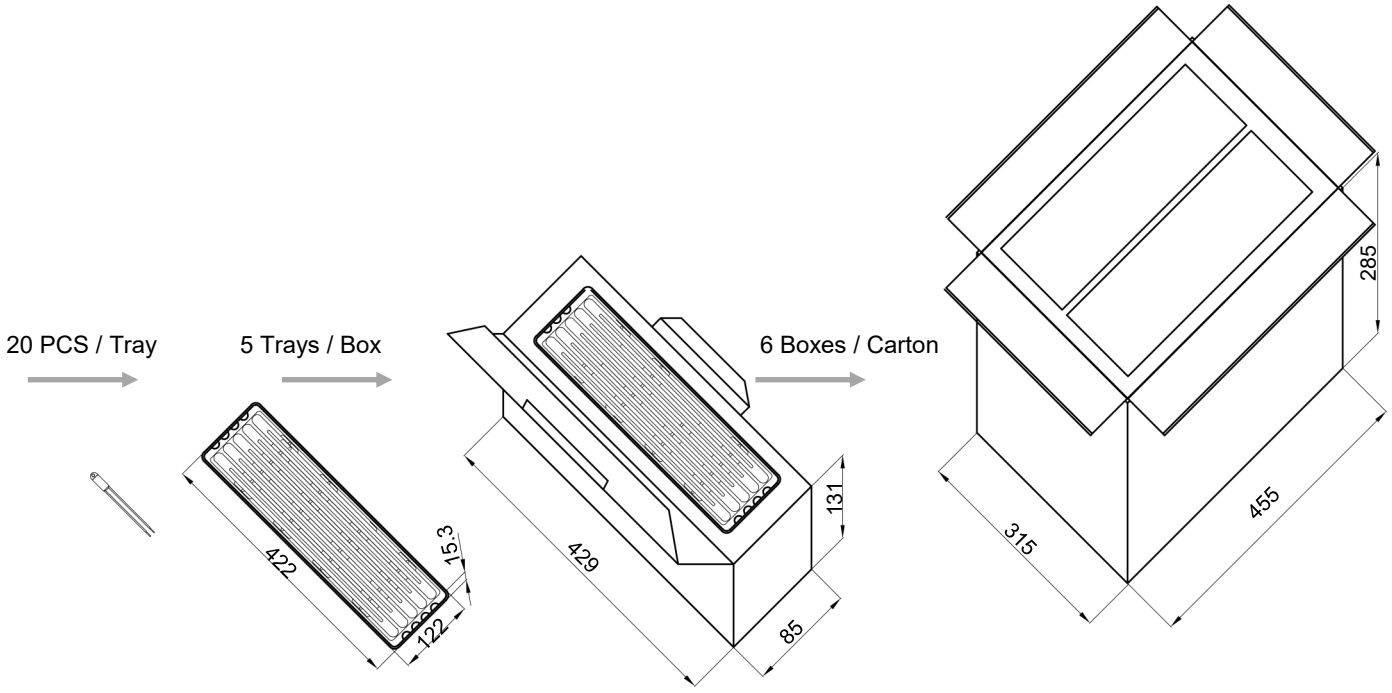




All Rights Reserved by Xiamen SET Electronics Co., Ltd. 2021-2023 V2.0

# DC-ATCO

DC-Alloy Thermal-Link

RVH Series $I_r$: 15 A

## Features

- Operating Voltage
- High Accuracy of Functioning Temp.
- Ceramic Case
- Non-Resettable
- RoHS & REACH Compliant

## Structure Diagram

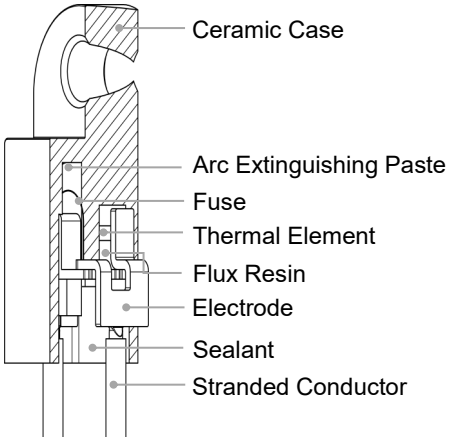


## Applications

- Battery Cooling Systems
- Pre-charged Resistors
- Automotive Air-Conditioners
- Heaters

## Customization

- Rated Functioning Temp.
- The Shape of Stranded Conductor

## Product Schematic

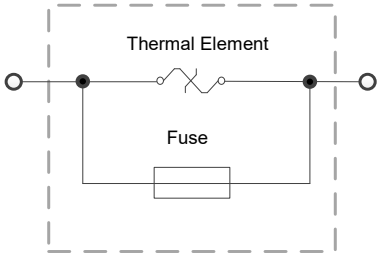


## Agency Approvals

| Agency Mark | Standards | File No. |
|---|---|---|
| ® | UL60691 | On-going |
| c ® | CAN-CSA-E60691 | On-going |



All Rights Reserved by Xiamen SET Electronics Co., Ltd. 2021-2023 V2.0

# DC-ATCO
DC-Alloy Thermal-Link

RVH Series $I_r$: 15 A



## Dimensions (mm)

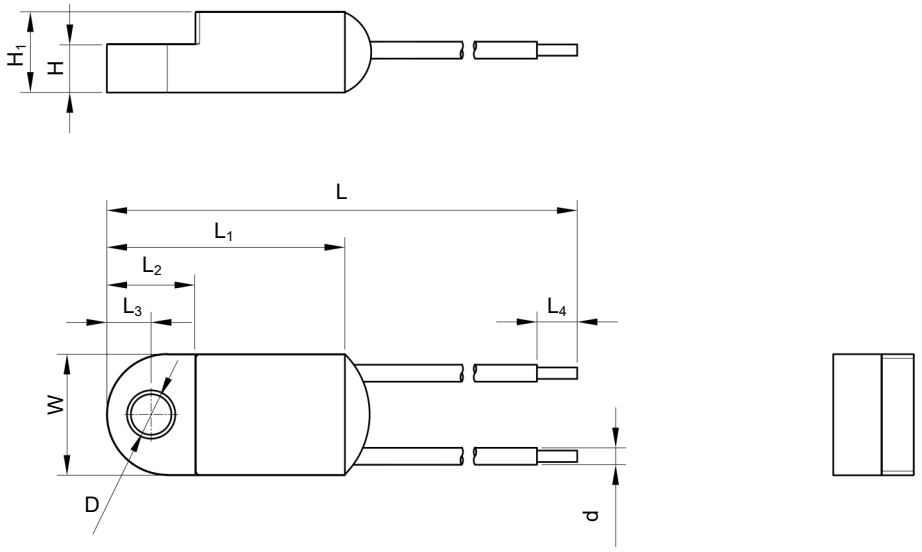


| L | $L_1$ | $L_2$ | $L_3$ | $L_4$ | W | H | $H_1$ | D | d |
|---|---|---|---|---|---|---|---|---|---|
| 129.5 ± 5.0 | 29.5 ± 1.0 | 11.0 ± 0.5 | 5.5 ± 0.5 | 10.0 ± 1.0 | 15.0 ± 1.0 | 6.0 ± 0.5 | 10.0 ± 1.0 | 5.0 ± 0.5 | AWG17 |

## Specifications

| Model | $T_f$ | Fusing Temp. with Load | $T_h$ | $T_m$ | $I_{min}$ | $I_r$ | $U_r$ | UL | cUL | TUV | VDE | CCC | RoHS REACH |
|---|---|---|---|---|---|---|---|---|---|---|---|---|---|
| | (°C) | (°C) | (°C) | (°C) | (A) | (A) | (V) | UL | cUL | TUV | VDE | CCC | |
| RVH102-HSF | 102 | 89 ± 3 | 65 | 250 | 0.5 | 15 | DC 600 | ○ | ○ | ○ | ○ | ○ | ● |
| RVH115-HSF | 115 | 105 ± 3 | 72 | 250 | 0.5 | 15 | DC 600 | ○ | ○ | ○ | ○ | ○ | ● |
| RVH125-HSF | 125 | 100 ± 3 | 65 | 250 | 0.5 | 15 | DC 600 | ○ | ○ | ○ | ○ | ○ | ● |
| RVH130-HSF | 130 | 102 ± 3 | 60 | 250 | 0.5 | 15 | DC 600 | ○ | ○ | ○ | ○ | ○ | ● |
| RVH136-HSF | 135 | 107 ± 3 | 75 | 250 | 0.5 | 15 | DC 600 | ○ | ○ | ○ | ○ | ○ | ● |
| RVH150-HSF | 150 | 130 ± 3 | 100 | 250 | 0.5 | 15 | DC 600 | ○ | ○ | ○ | ○ | ○ | ● |
| RVH187-HSF | 187 | 182 ± 3 | 160 | 250 | 0.5 | 15 | DC 600 | ○ | ○ | ○ | ○ | ○ | ● |



All Rights Reserved by Xiamen SET Electronics Co., Ltd. 2021-2023 V2.0

## Temp.-Time Curve

The functioning temperature time curve of Alloy Thermal-Link in different Temp. oil bath. (This curve is for reference only)

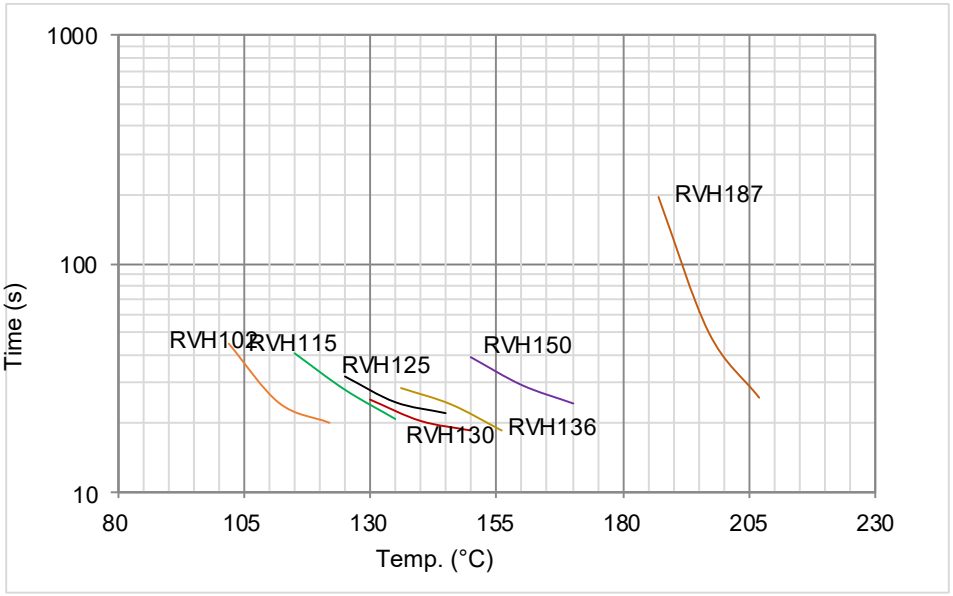


## Current-Time Curve

This is an illustrated curve, describing the opening time at Multi-times rated current in the condition of the room Temp. 25 °C. (This curve is for reference only)

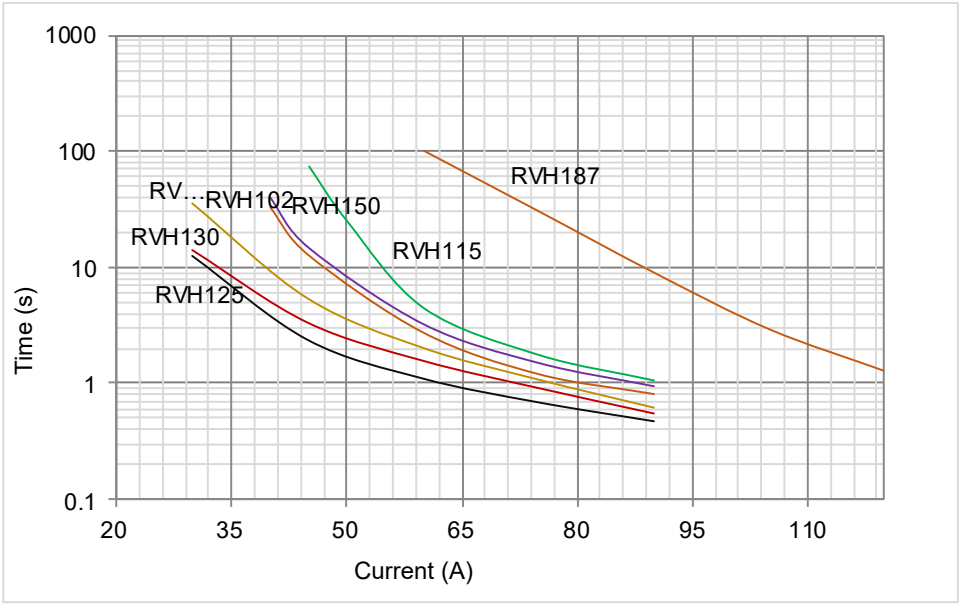




All Rights Reserved by Xiamen SET Electronics Co., Ltd. 2021-2023 V2.0

## Packaging Information

| Item | Tray | Box | Carton |
|---|---|---|---|
| Dimensions (mm) | 422 x 122 x 15.3 | 429 x 85 x 131 | 455 x 315 x 285 |
| Quantity (PCS) | 20 | 100 | 600 |
| Gross Weight (kg): | | | 20 ± 10% |

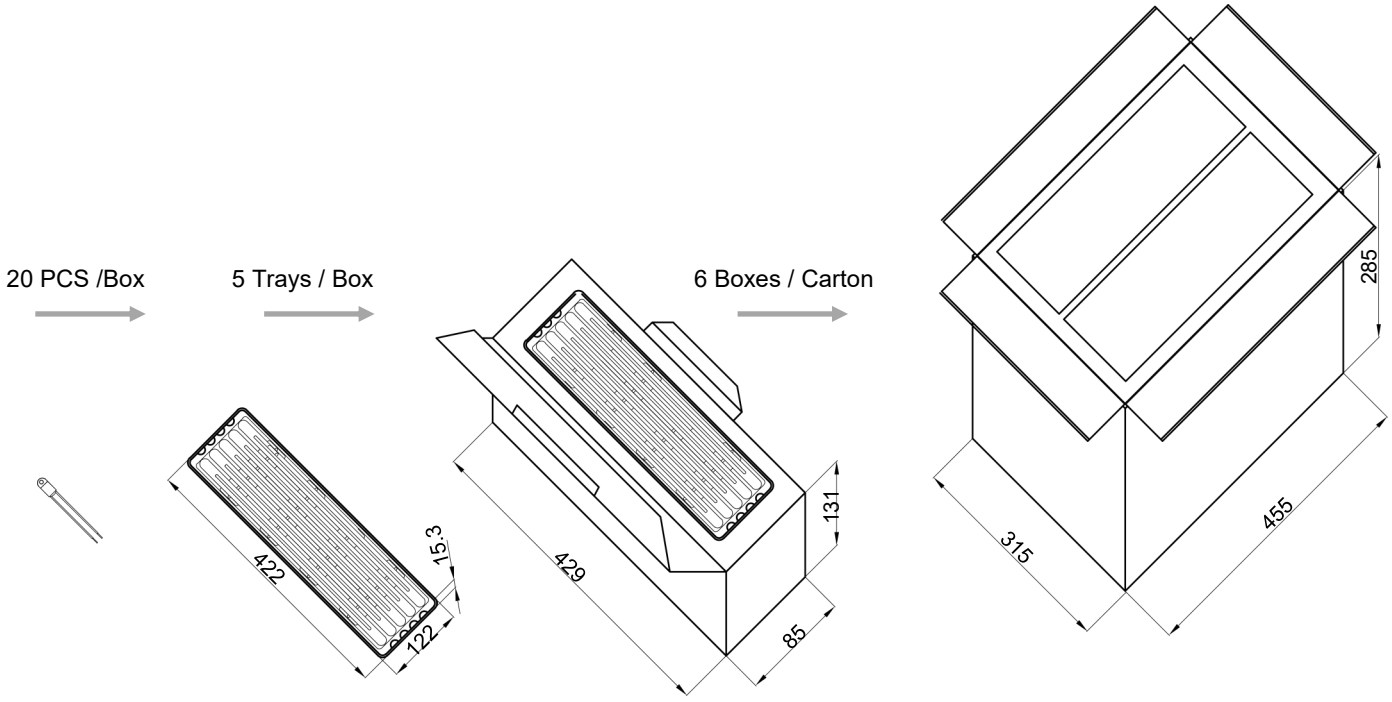



All Rights Reserved by Xiamen SET Electronics Co., Ltd. 2021-2023 V2.0

# DC-ATCO

DC-Alloy Thermal-Link

ASLxxxA Series $I_r$: 30 A

## Features

- Operating Voltage
- High Accuracy of Functioning Temp.
- Ceramic Case
- Non-Resettable
- RoHS & REACH Compliant

## Structure Diagram

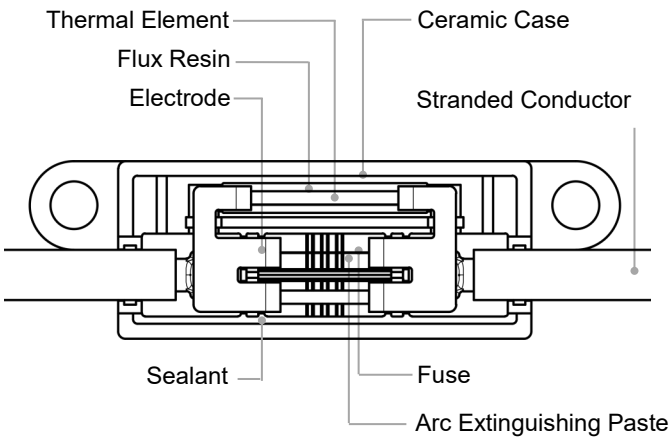


## Applications

- Battery Cooling Systems
- Pre-charged Resistors
- Automotive Air-Conditioners
- Heaters

## Customization

- Rated Functioning Temp.
- The Shape of Stranded Conductor

## Product Schematic

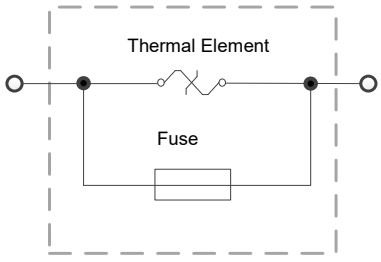


## Agency Approvals

| Agency Mark | Standards | File No. |
|---|---|---|
| UL® | UL60691 | On-going |
| cUL® | CAN-CSA-E60691 | On-going |



All Rights Reserved by Xiamen SET Electronics Co., Ltd. 2021-2023 V2.0

# DC-ATCO
DC-Alloy Thermal-Link

**ASLxxxA Series $I_r$: 30 A**



## Dimensions (mm)

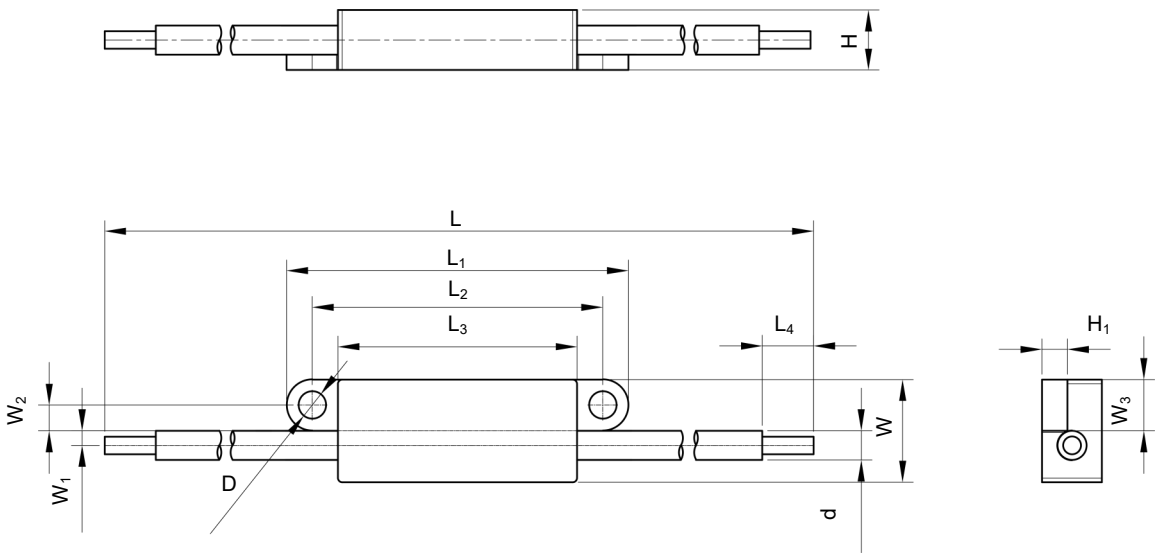


| L | $L_1$ | $L_2$ | $L_3$ | $L_4$ | W | $W_1$ | $W_2$ | $W_3$ | H | $H_1$ | D | d |
|---|---|---|---|---|---|---|---|---|---|---|---|---|
| 228.0 ± 5.0 | 40.0 ± 1.0 | 34.00 ± 1.0 | 28.0 ± 1.0 | 10.0 ± 1.0 | 12.0 ± 1.0 | 1.7 ± 0.2 | 3.0 ± 0.2 | 6.0 ± 0.5 | 7.0 ± 1.0 | 3.0 ± 0.5 | 3.2 ± 0.2 | AWG12 |

## Specifications

| Model | $T_f$ | Fusing Temp. with Load | $T_h$ | $T_m$ | $I_{min}$ | $I_r$ | $U_r$ | UL | cUL | TUV | VDE | CCC | RoHS REACH |
|---|---|---|---|---|---|---|---|---|---|---|---|---|---|
| | (°C) | (°C) | (°C) | (°C) | (A) | (A) | (V) | UL | cUL | TUV | VDE | CCC | |
| ASL102A-LSF | 102 | 82 ± 3 | 55 | 250 | 0.5 | 30 | DC 600 | ○ | ○ | ○ | ○ | ○ | ● |
| ASL115A-LSF | 115 | 95 ± 3 | 65 | 250 | 0.5 | 30 | DC 600 | ○ | ○ | ○ | ○ | ○ | ● |
| ASL125A-LSF | 125 | 105 ± 3 | 70 | 250 | 0.5 | 30 | DC 600 | ○ | ○ | ○ | ○ | ○ | ● |
| ASL136A-LSF | 135 | 116 ± 3 | 80 | 250 | 0.5 | 30 | DC 600 | ○ | ○ | ○ | ○ | ○ | ● |
| ASL150A-LSF | 150 | 130 ± 3 | 95 | 250 | 0.5 | 30 | DC 600 | ○ | ○ | ○ | ○ | ○ | ● |
| ASL187A-LSF | 187 | 167 ± 3 | 140 | 250 | 0.5 | 30 | DC 600 | ○ | ○ | ○ | ○ | ○ | ● |



All Rights Reserved by Xiamen SET Electronics Co., Ltd. 2021-2023 V2.0

## Temp.-Time Curve

The functioning temperature time curve of Alloy Thermal-Link in different Temp. oil bath. (This curve is for reference only)

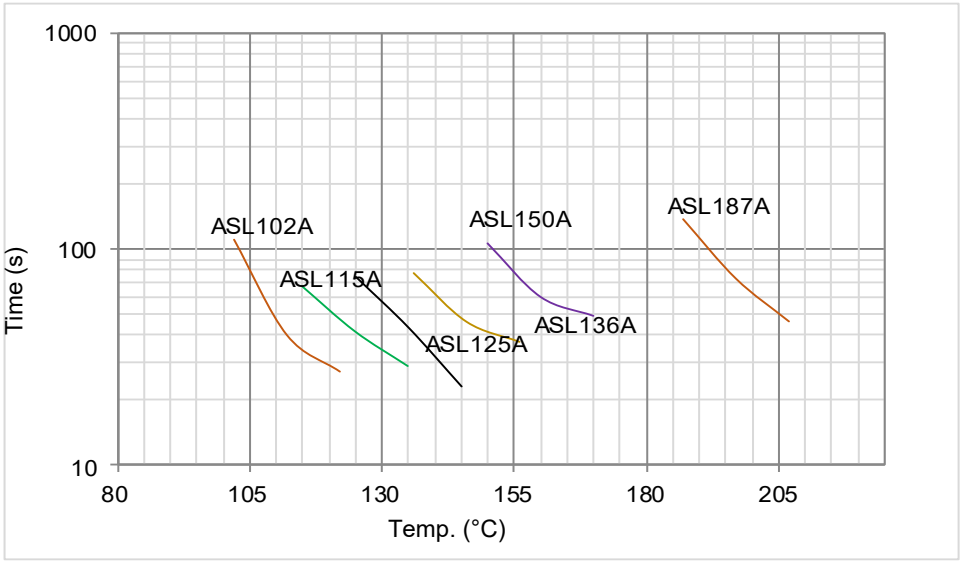


## Current-Time Curve

This is an illustrated curve, describing the opening time at Multi-times rated current in the condition of the room Temp. 25 °C. (This curve is for reference only)

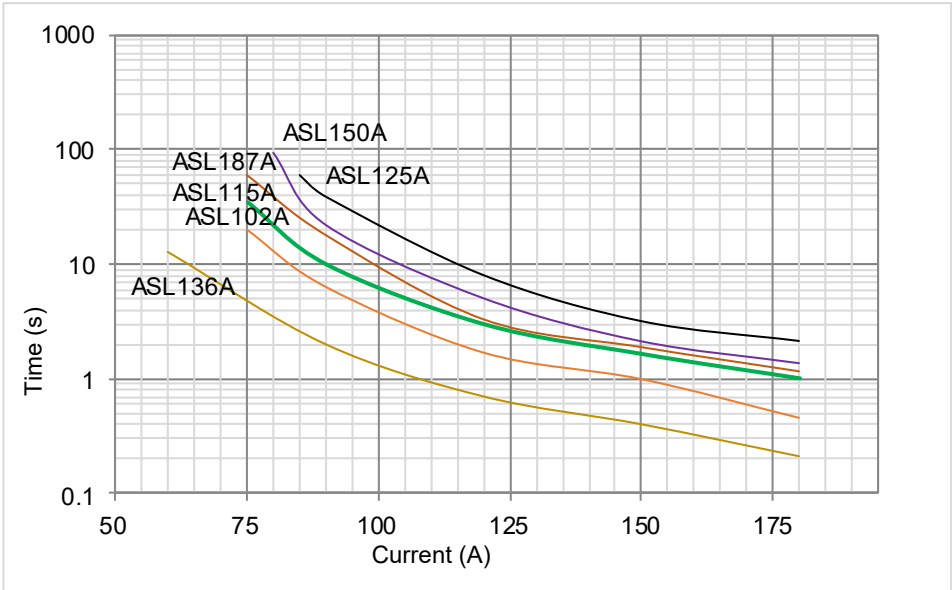



All Rights Reserved by Xiamen SET Electronics Co., Ltd. 2021-2023 V2.0

## Packaging Information

| Item | Tray | Box | Carton |
|---|---|---|---|
| Dimensions (mm) | 422 x 122 x 15.3 | 429 x 85 x 131 | 455 x 315 x 285 |
| Quantity (PCS) | 20 | 100 | 600 |
| Gross Weight (kg): | | | 20 ± 10% |

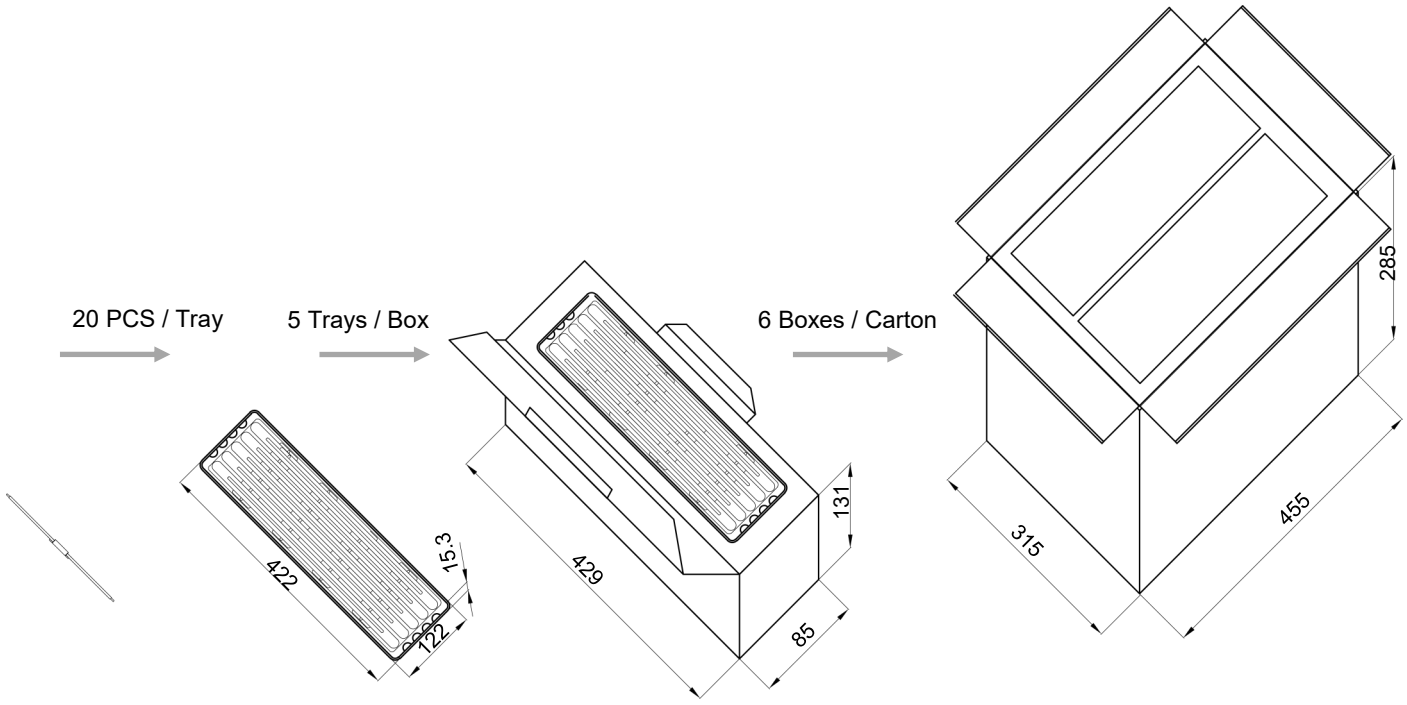


DC-ATCO



All Rights Reserved by Xiamen SET Electronics Co., Ltd. 2021-2023 V2.0

# DC-ATCO

DC-Alloy Thermal-Link

RPK Series $I_r$: 15 A

## Features

- Operating Voltage
- High Accuracy of Functioning Temp.
- Ceramic Case
- Non-Resettable
- RoHS & REACH Compliant

## Structure Diagram

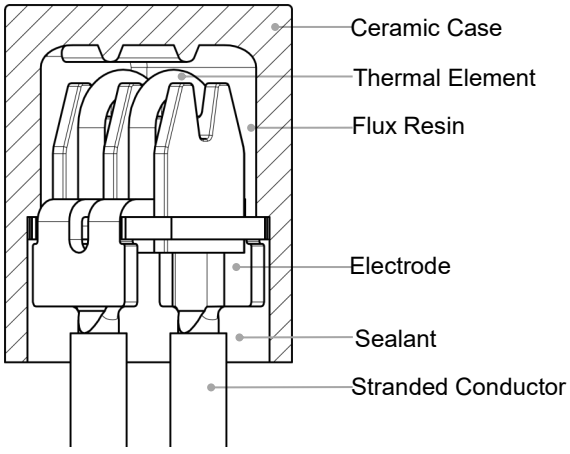


## Applications

- Battery Cooling Systems
- Pre-charged Resistors
- Automotive Air-Conditioners
- Heaters

## Customization

- Rated Functioning Temp.
- The Shape of Stranded Conductor

## Product Schematic

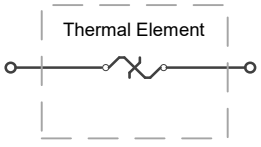


## Agency Approvals

| Agency Mark | Standards | File No. |
|---|---|---|
| | UL60691 | On-going |
| | CAN-CSA-E60691 | On-going |



All Rights Reserved by Xiamen SET Electronics Co., Ltd. 2021-2023 V2.0

# DC-ATCO
DC-Alloy Thermal-Link

RPK Series $I_r$: 15 A



## Dimensions (mm)

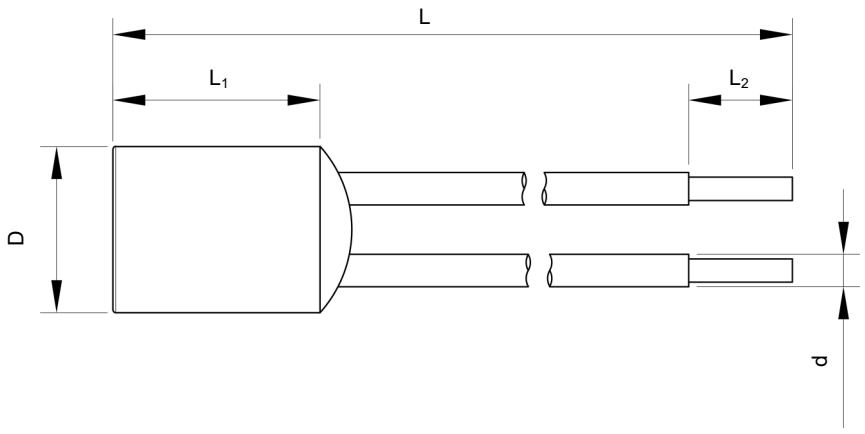


| L | $L_1$ | $L_2$ | D | d |
|---|---|---|---|---|
| 116.0 ± 5.0 | 16.0 ± 1.0 | 10.0 ± 1.0 | 12.8 ± 0.5 | AWG14 |

## Specifications

| Model | $T_f$ | Fusing Temp. | $T_h$ | $T_m$ | $I_{min}$ | $I_r$ | $U_r$ | UL | cUL | TUV | VDE | CCC | RoHS REACH |
|---|---|---|---|---|---|---|---|---|---|---|---|---|---|
| | (°C) | (°C) | (°C) | (°C) | (A) | (A) | (V) | | | | | | |
| RPK102-HRZ | 102 | 97 ± 5 | 65 | 250 | 0 | 15 | DC 500 | ○ | ○ | ○ | ○ | ○ | ● |
| RPK115-HRZ | 115 | 110 ± 5 | 70 | 250 | 0 | 15 | DC 500 | ○ | ○ | ○ | ○ | ○ | ● |
| RPK125-HRZ | 125 | 125 ± 5 | 85 | 250 | 0 | 15 | DC 500 | ○ | ○ | ○ | ○ | ○ | ● |
| RPK136-HRZ | 136 | 131 ± 5 | 70 | 250 | 0 | 15 | DC 500 | ○ | ○ | ○ | ○ | ○ | ● |
| RPK150-HRZ | 150 | 145 ± 5 | 100 | 250 | 0 | 15 | DC 500 | ○ | ○ | ○ | ○ | ○ | ● |


All Rights Reserved by Xiamen SET Electronics Co., Ltd. 2021-2023 V2.0

## Temp.-Time Curve

The functioning temperature time curve of Alloy Thermal-Link in different Temp. oil bath. (This curve is for reference only)

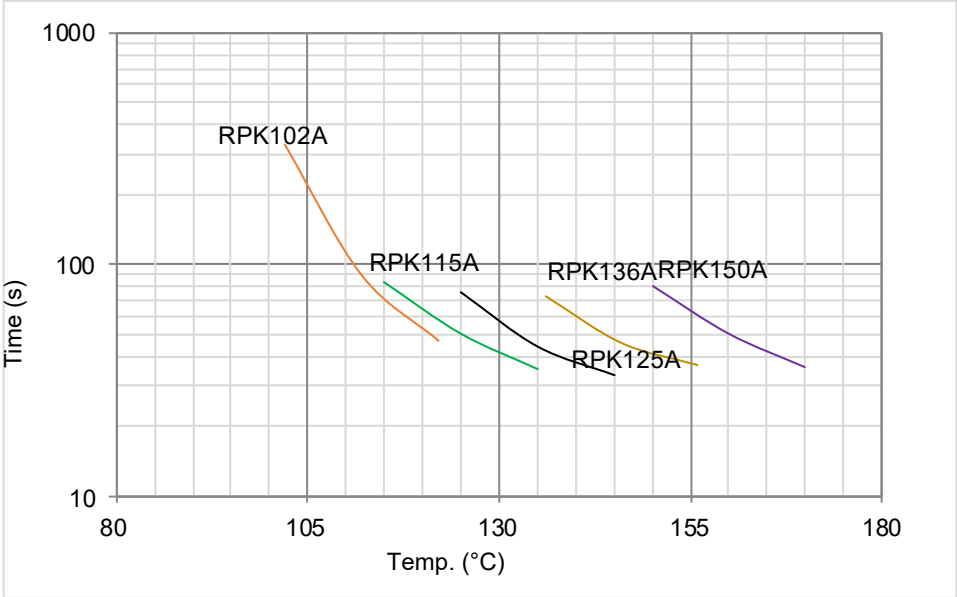


DC-ATCO

## Current-Time Curve

This is an illustrated curve, describing the opening time at Multi-times rated current in the condition of the room Temp. 25 °C. (This curve is for reference only)

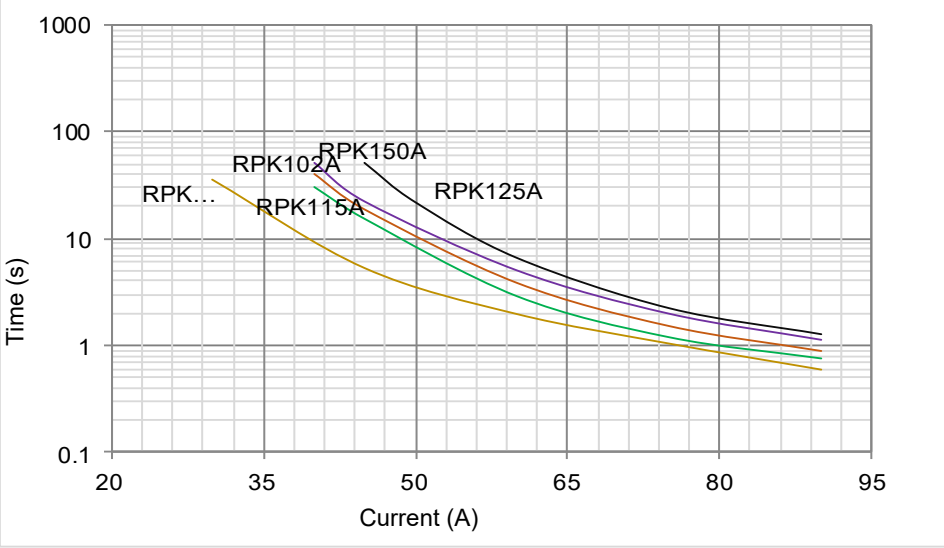



All Rights Reserved by Xiamen SET Electronics Co., Ltd. 2021-2023 V2.0

## Packaging Information



| Item | Tray | Box | Carton |
|---|---|---|---|
| Dimensions (mm) | 422 x 122 x 15.3 | 429 x 85 x 131 | 455 x 315 x 285 |
| Quantity (PCS) | 20 | 100 | 600 |
| Gross Weight (kg): | | | 20 ± 10% |

DC-ATCO

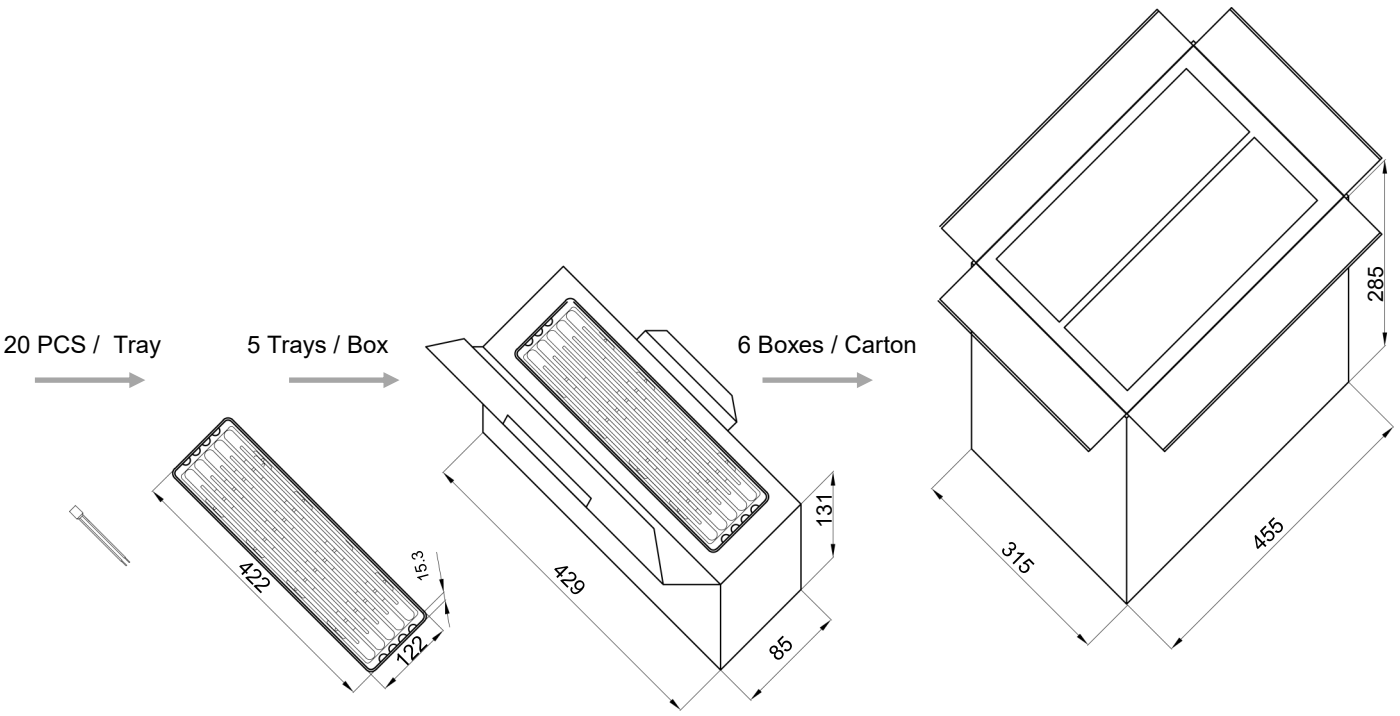



All Rights Reserved by Xiamen SET Electronics Co., Ltd. 2021-2023 V2.0

# DC-ATCO

DC-Alloy Thermal-Link

ARL Series $I_r$: 30 A

## Features

- Operating Voltage
- High Accuracy of Functioning Temp.
- Ceramic Case
- Non-Resettable
- RoHS & REACH Compliant

## Structure Diagram

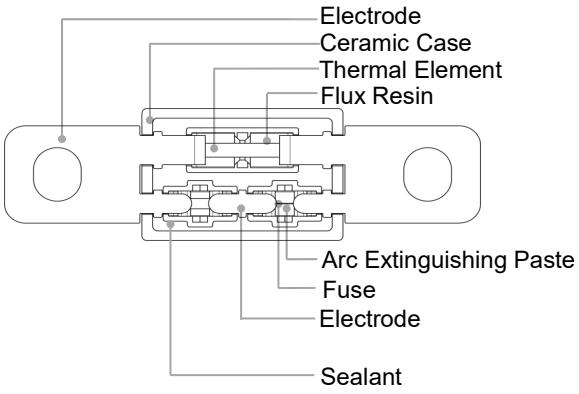


## Applications

- Battery Cooling Systems
- Pre-charged Resistors
- Automotive Air-Conditioners
- Heaters

## Customization

- Rated Functioning Temp.
- The Shape of Electrode

## Product Schematic

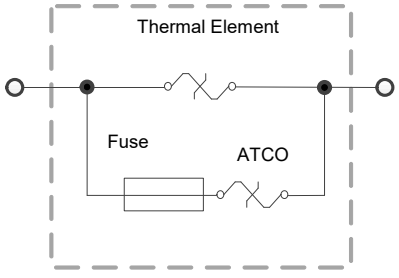


## Agency Approvals

| Agency Mark | Standards | File No. |
|---|---|---|
| | UL60691 | On-going |
| | CAN-CSA-E60691 | On-going |



All Rights Reserved by Xiamen SET Electronics Co., Ltd. 2021-2023 V2.0

# DC-ATCO
DC-Alloy Thermal-Link

ARL Series $I_r$: 30 A



## Dimensions (mm)

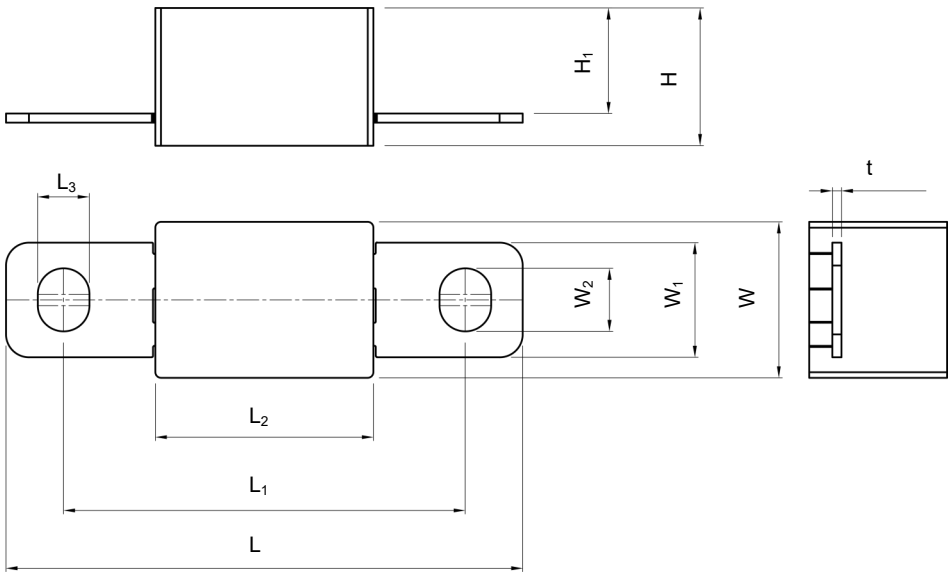


| L | $L_1$ | $L_2$ | $L_3$ | W | $W_1$ | $W_2$ | H | $H_1$ | t |
|---|---|---|---|---|---|---|---|---|---|
| 45.0 ± 1.0 | 35.0 ± 1.0 | 19.0 ± 1.0 | 4.5 ± 0.2 | 13.6 ± 1.0 | 10.00 ± 0.05 | 5.5 ± 0.2 | 12.0 ± 0.8 | 9.2 ± 0.8 | 0.80 ± 0.05 |

## Specifications

| Model | $T_f$ | Fusing Temp. with Load | $T_h$ | $T_m$ | $I_{min}$ | $I_r$ | $U_r$ | UL | cUL | TUV | VDE | CCC | RoHS REACH |
|---|---|---|---|---|---|---|---|---|---|---|---|---|---|
| | (°C) | (°C) | (°C) | (°C) | (A) | (A) | (V) | UL | cUL | TUV | VDE | CCC | |
| ARL86-LRA | 86 | 83 ± 2 | 45 | 250 | 0 | 30 | DC 500 | ○ | ○ | ○ | ○ | ○ | ● |
| ARL102-LRA | 102 | 99 ± 2 | 75 | 250 | 0 | 30 | DC 500 | ○ | ○ | ○ | ○ | ○ | ● |
| ARL115-LRA | 115 | 111 ± 2 | 75 | 250 | 0 | 30 | DC 500 | ○ | ○ | ○ | ○ | ○ | ● |
| ARL125-LRA | 125 | 121 ± 2 | 85 | 250 | 0 | 30 | DC 500 | ○ | ○ | ○ | ○ | ○ | ● |
| ARL136-LRA | 135 | 131 ± 2 | 80 | 250 | 0 | 30 | DC 500 | ○ | ○ | ○ | ○ | ○ | ● |
| ARL150-LRA | 150 | 146 ± 2 | 120 | 250 | 0 | 30 | DC 500 | ○ | ○ | ○ | ○ | ○ | ● |
| ARL187-LRA | 187 | 184 ± 2 | 125 | 250 | 0 | 30 | DC 500 | ○ | ○ | ○ | ○ | ○ | ● |



All Rights Reserved by Xiamen SET Electronics Co., Ltd. 2021-2023 V2.0

## Temp.-Time Curve

The functioning temperature time curve of Alloy Thermal-Link in different Temp. oil bath. (This curve is for reference only)

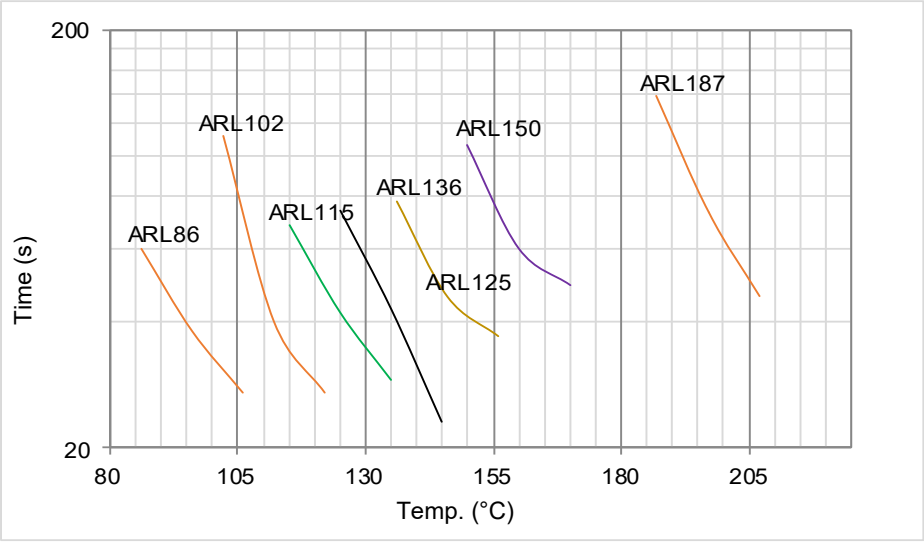


DC-ATCO

## Current-Time Curve

This is an illustrated curve, describing the opening time at Multi-times rated current in the condition of the room Temp. 25 °C. (This curve is for reference only)

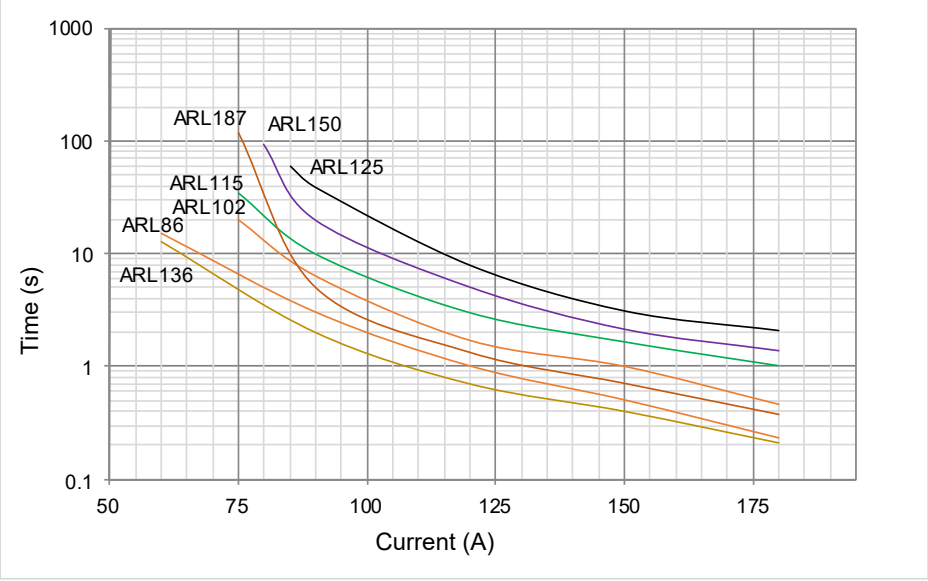



All Rights Reserved by Xiamen SET Electronics Co., Ltd. 2021-2023 V2.0

## Packaging Information

| Item | Tray | PE Bag | Carton |
|---|---|---|---|
| Dimensions (mm) | 290 x 215 x 20 | 290 x 215 x 60 | 455 x 315 x 285 |
| Quantity (PCS) | 50 | 100 | 800 |
| Gross Weight (kg): | | | 20 ± 10% |

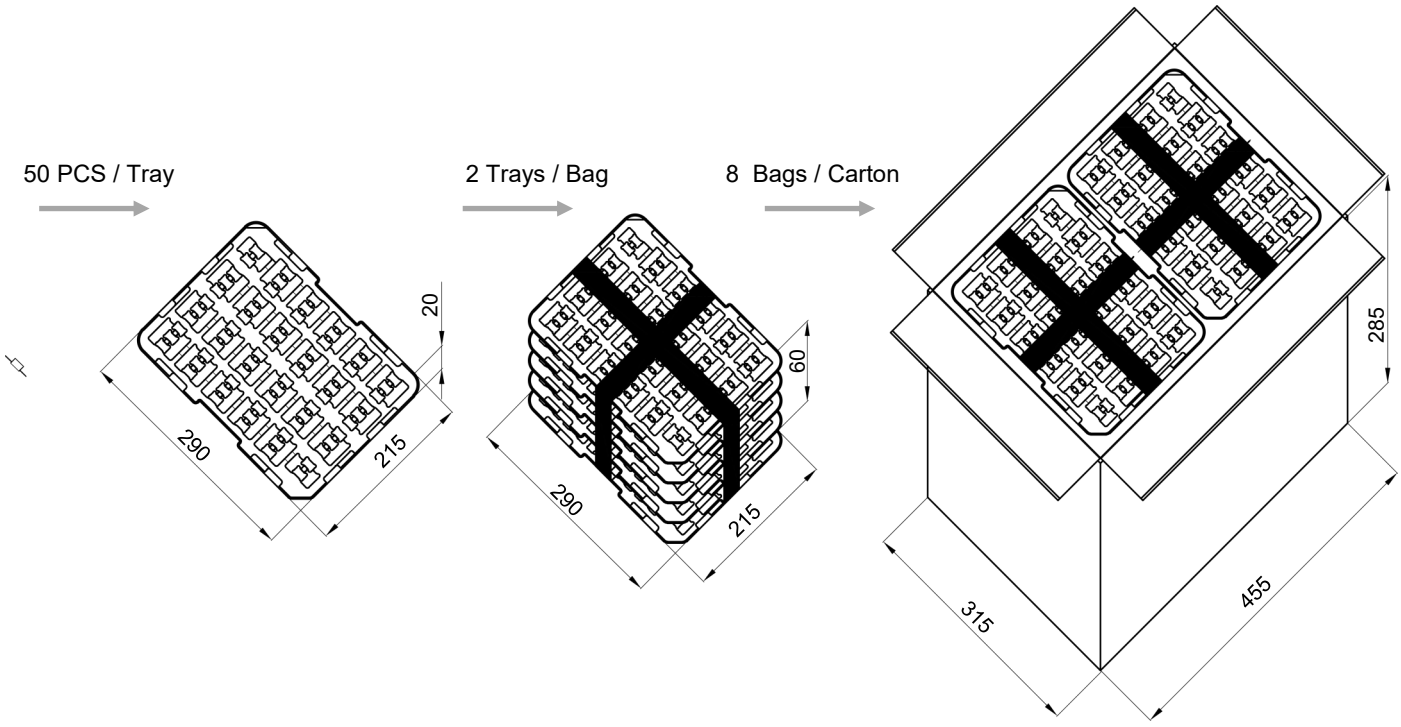



All Rights Reserved by Xiamen SET Electronics Co., Ltd. 2021-2023 V2.0

# DC-ATCO

DC-Alloy Thermal-Link

RQF Series $I_r$: 10 A

## Features

- Operating Voltage
- High Accuracy of Functioning Temp.
- Ceramic Case
- Non-Resettable
- RoHS & REACH Compliant

## Structure Diagram

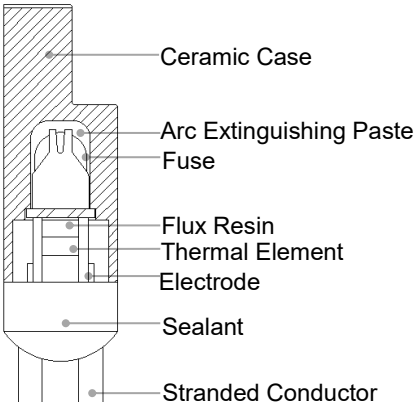


## Applications

- Battery Cooling Systems
- Pre-charged Resistors
- Automotive Air-Conditioners
- Heaters

## Customization

- Rated Functioning Temp.
- The Shape of Stranded Conductor

## Product Schematic

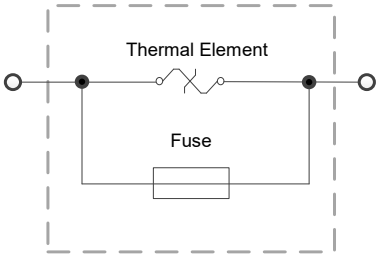


## Agency Approvals

| Agency Mark | Standards | File No. |
|---|---|---|
| ® | UL60691 | On-going |
| c ® | CAN-CSA-E60691 | On-going |



All Rights Reserved by Xiamen SET Electronics Co., Ltd. 2021-2023 V2.0

# DC-ATCO
DC-Alloy Thermal-Link

RQF Series $I_r$: 10 A



## Dimensions (mm)

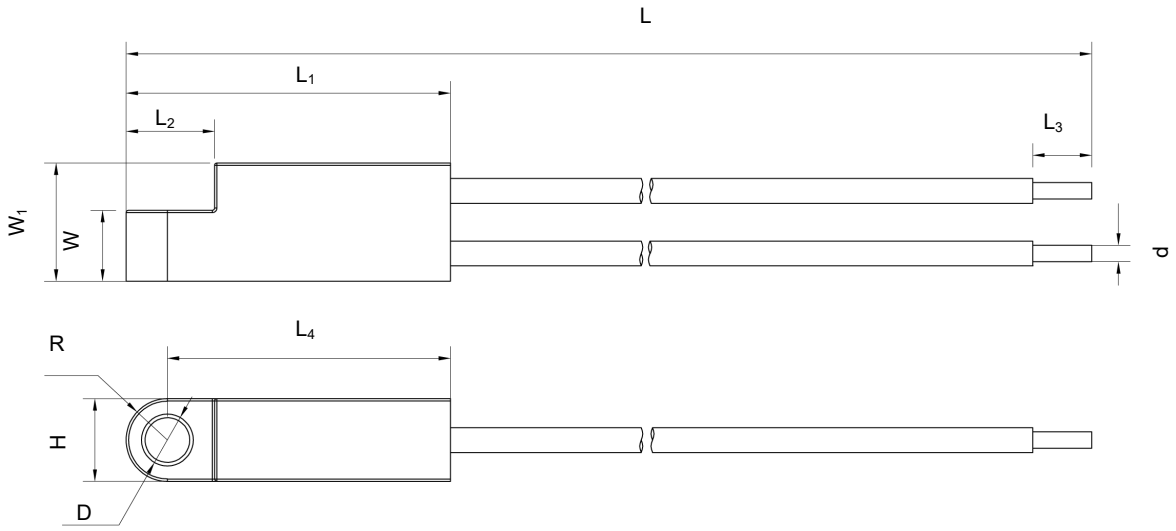


| L | $L_1$ | $L_2$ | $L_3$ | $L_4$ | W | $W_1$ | H | R | D | d |
|---|---|---|---|---|---|---|---|---|---|---|
| 127.5 ± 5.0 | 27.5 ± 1.0 | 7.5 ± 0.5 | 5.0 ± 0.5 | 24.0 ± 1.0 | 6.0 ± 0.5 | 10.0 ± 1.0 | 7.0 ± 0.5 | 3.5 ± 0.2 | 3.8 ± 0.2 | AWG16 |

## Specifications

| Model | $T_f$ | Fusing Temp. with Load | $T_h$ | $T_m$ | $I_{min}$ | $I_r$ | $U_r$ | UL | cUL | TUV | VDE | CCC | RoHS REACH |
|---|---|---|---|---|---|---|---|---|---|---|---|---|---|
| | (°C) | (°C) | (°C) | (°C) | (A) | (A) | (V) | | | | | | |
| RQF86-FQS | 86 | 77 ± 3 | 45 | 250 | 3 | 10 | DC 450 | ○ | ○ | ○ | ○ | ○ | ● |
| RQF102-FQS | 102 | 95 ± 3 | 75 | 250 | 3 | 10 | DC 450 | ○ | ○ | ○ | ○ | ○ | ● |
| RQF115-FQS | 115 | 110 ± 3 | 85 | 250 | 3 | 10 | DC 450 | ○ | ○ | ○ | ○ | ○ | ● |
| RQF125-FQS | 125 | 116 ± 3 | 85 | 250 | 3 | 10 | DC 450 | ○ | ○ | ○ | ○ | ○ | ● |
| RQF130-FQS | 130 | 119 ± 3 | 95 | 250 | 3 | 10 | DC 450 | ○ | ○ | ○ | ○ | ○ | ● |
| RQF136-FQS | 135 | 124 ± 3 | 100 | 250 | 3 | 10 | DC 450 | ○ | ○ | ○ | ○ | ○ | ● |
| RQF150-FQS | 150 | 143 ± 3 | 115 | 250 | 3 | 10 | DC 450 | ○ | ○ | ○ | ○ | ○ | ● |
| RQF187-FQS | 187 | 183 ± 3 | 155 | 250 | 3 | 10 | DC 450 | ○ | ○ | ○ | ○ | ○ | ● |



All Rights Reserved by Xiamen SET Electronics Co., Ltd. 2021-2023 V2.0

## Temp.-Time Curve

The functioning temperature time curve of Alloy Thermal-Link in different Temp. oil bath. (This curve is for reference only)

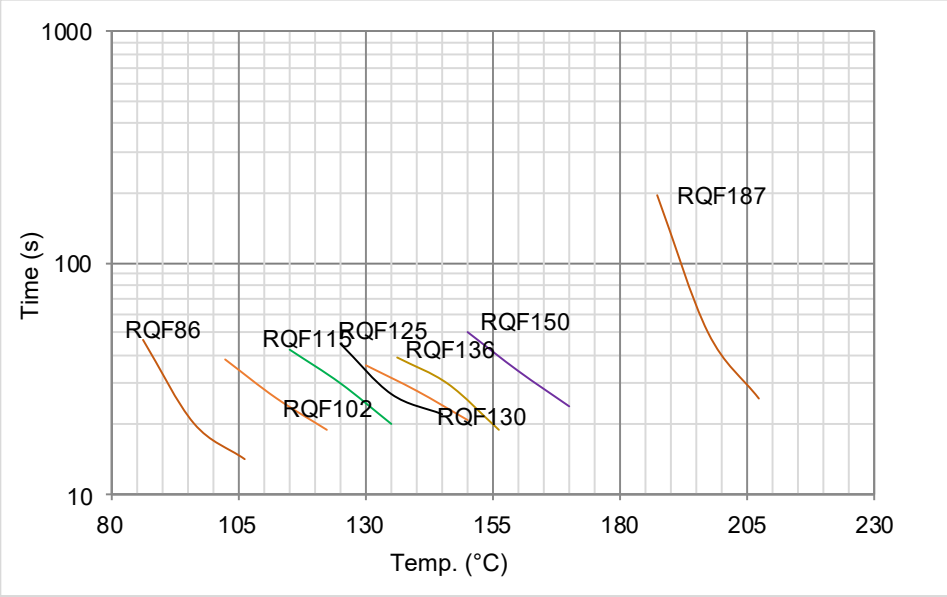


DC-ATCO

## Current-Time Curve

This is an illustrated curve, describing the opening time at Multi-times rated current in the condition of the room Temp. 25 °C. (This curve is for reference only)

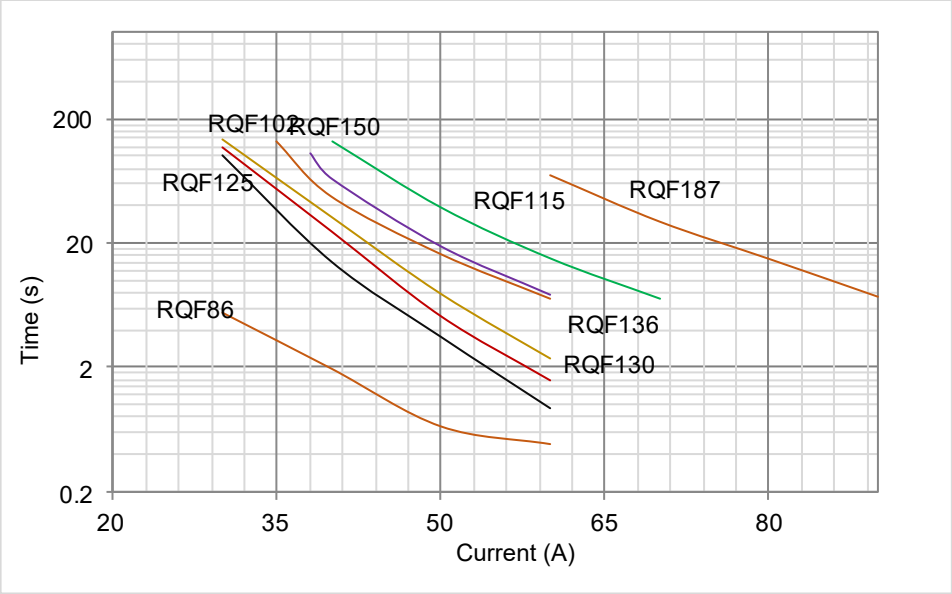



All Rights Reserved by Xiamen SET Electronics Co., Ltd. 2021-2023 V2.0

## Packaging Information

| Item | PE Bag | Box | Carton |
|---|---|---|---|
| Dimensions (mm) | 140 x 94 | 245 x 165 x 67 | 365 x 260 x 385 |
| Quantity (PCS) | 5 | 100 | 1000 |
| Gross Weight (kg): | | | 20 ± 10% |

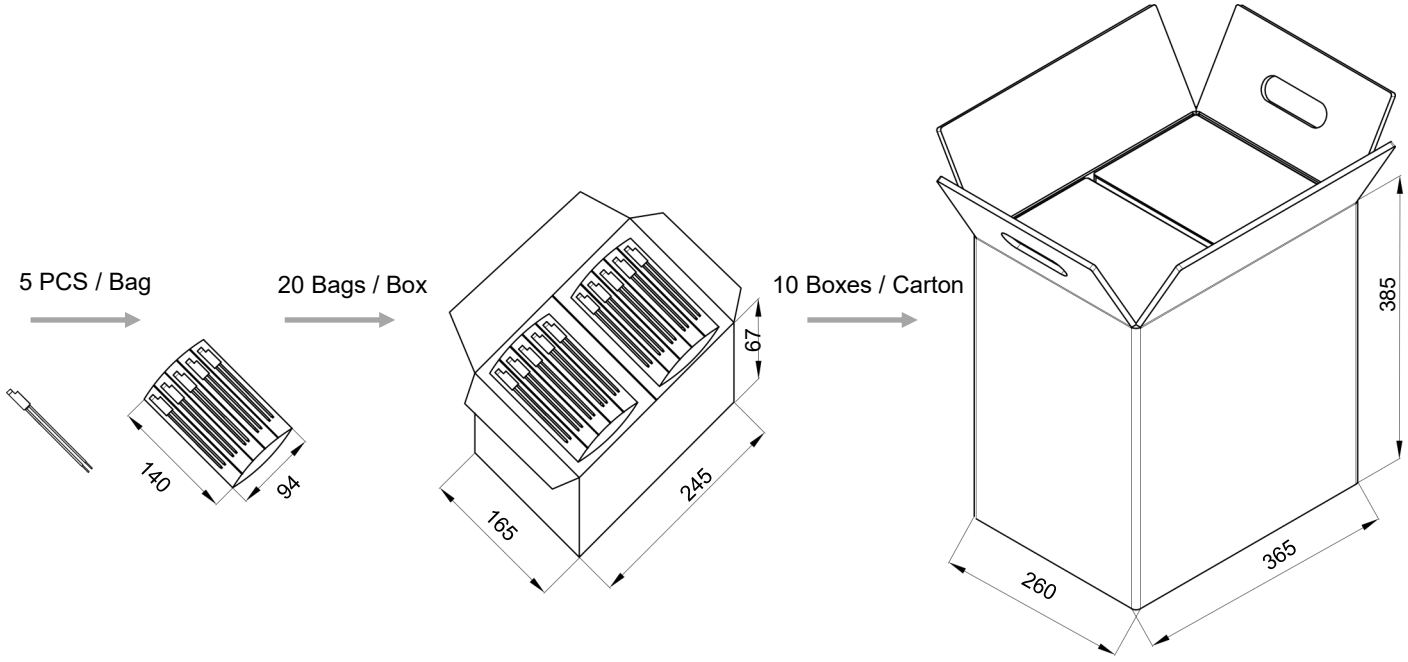



All Rights Reserved by Xiamen SET Electronics Co., Ltd. 2021-2023 V2.0

# DC-ATCO

DC-Alloy Thermal-Link

TGxxxC Series $I_r$ : 15 A / 20 A

## Features

- 0 to 450 VDC / 0 to 600 VAC Operating Voltage
- High Accuracy of Functioning Temp.
- Ceramic Case
- Non-Resettable
- RoHS & REACH Compliant

## Structure Diagram

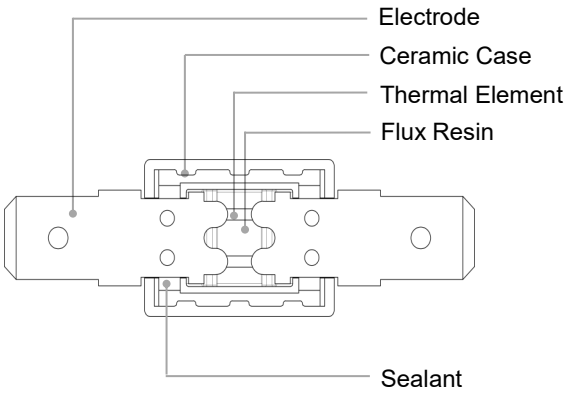


## Applications

- Battery Cooling Systems
- Pre-charged Resistors
- Automotive Air-Conditioners
- Heaters

## Customization

- Rated Functioning Temp.
- Shape of Electrode

## Product Schematic

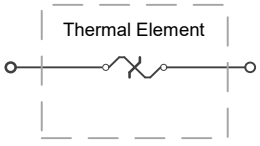


## Agency Approvals

| Agency Mark | Standards | File No. |
|---|---|---|
| | UL60691 | E214712 |
| | CAN-CSA-E60691 | E214712 |



All Rights Reserved by Xiamen SET Electronics Co., Ltd. 2021-2023 V2.0

# DC-ATCO
DC-Alloy Thermal-Link

**TGxxxC Series $I_r$ : 15 A / 20 A**



## Dimensions (mm)

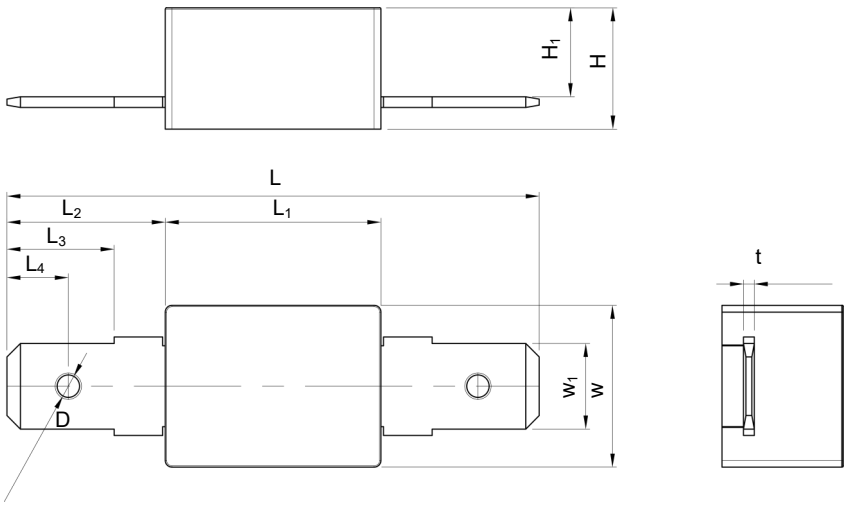


| L | $L_1$ | $L_2$ | $L_3$ | $L_4$ | W | $W_1$ | H | $H_1$ | t | D |
|---|---|---|---|---|---|---|---|---|---|---|
| 39.5 ± 2.0 | 16.0 ± 1.0 | 11.75 ± 0.30 | 7.95 ± 0.30 | 4.55 ± 0.2 | 12.0 ± 1.0 | 6.35 ± 0.20 | $9.0^{-0.0}_{+0.5}$ | $6.0^{-0.0}_{+1.0}$ | 0.80 ± 0.05 | 1.65 ± 0.20 |

## Specifications

For Automotive Application: Battery Cooling System, Pre-charged Resistor, Automotive Air Conditioning

| Model | $T_f$ | Fusing Temp. | $T_h$ | $T_m$ | $I_{min}$ | $I_r$ | $U_r$ | UL | cUL | TUV | VDE | CCC | RoHS REACH |
|---|---|---|---|---|---|---|---|---|---|---|---|---|---|
| | (°C) | (°C) | (°C) | (°C) | (A) | (A) | (V) | | | | | | |
| TG86C | 86 | 81 ± 5 | 43 | 250 | 0 | 15 | DC 450 | ● | ● | ○ | ○ | ○ | ● |
| TG86C | | | | | 0 | 15 | AC 600 | ● | ● | ○ | ○ | ○ | ● |
| TG102C | 102 | 97 ± 5 | 65 | 250 | 0 | 15 | DC 450 | ● | ● | ○ | ○ | ○ | ● |
| TG102C | | | 62 | | 0 | 20 | DC 400 | ● | ● | ○ | ○ | ○ | ● |
| TG102C | | | | | 0 | 20 | AC 600 | ● | ● | ○ | ○ | ○ | ● |
| TG115C | 115 | 110 ± 5 | 72 | 250 | 0 | 15 | DC 450 | ● | ● | ○ | ○ | ○ | ● |
| TG115C | | | 70 | | 0 | 20 | DC 400 | ● | ● | ○ | ○ | ○ | ● |
| TG115C | | | | | 0 | 20 | AC 600 | ● | ● | ○ | ○ | ○ | ● |
| TG125C | 125 | 120 ± 5 | 85 | 250 | 0 | 15 | DC 450 | ● | ● | ○ | ○ | ○ | ● |
| TG125C | | | | | 0 | 20 | DC 400 | ● | ● | ○ | ○ | ○ | ● |
| TG125C | | | | | 0 | 20 | AC 600 | ● | ● | ○ | ○ | ○ | ● |
| TG136C- | 136 | 131 ± 5 | 90 | 250 | 0 | 15 | DC 450 | ● | ● | ○ | ○ | ○ | ● |
| TG136C | | | | | 0 | 20 | DC 400 | ● | ● | ○ | ○ | ○ | ● |
| TG136C | | | | | 0 | 20 | AC 600 | ● | ● | ○ | ○ | ○ | ● |
| TG150C | 150 | 145 ± 5 | 100 | 250 | 0 | 15 | DC 450 | ● | ● | ○ | ○ | ○ | ● |
| TG150C | | | | | 0 | 20 | DC 400 | ● | ● | ○ | ○ | ○ | ● |
| TG150C | | | | | 0 | 20 | AC 600 | ● | ● | ○ | ○ | ○ | ● |


All Rights Reserved by Xiamen SET Electronics Co., Ltd. 2021-2023 V2.0

## Temp.-Time Curve

The functioning temperature time curve of Alloy Thermal-Link in different Temp. oil bath. (This curve is for reference only)

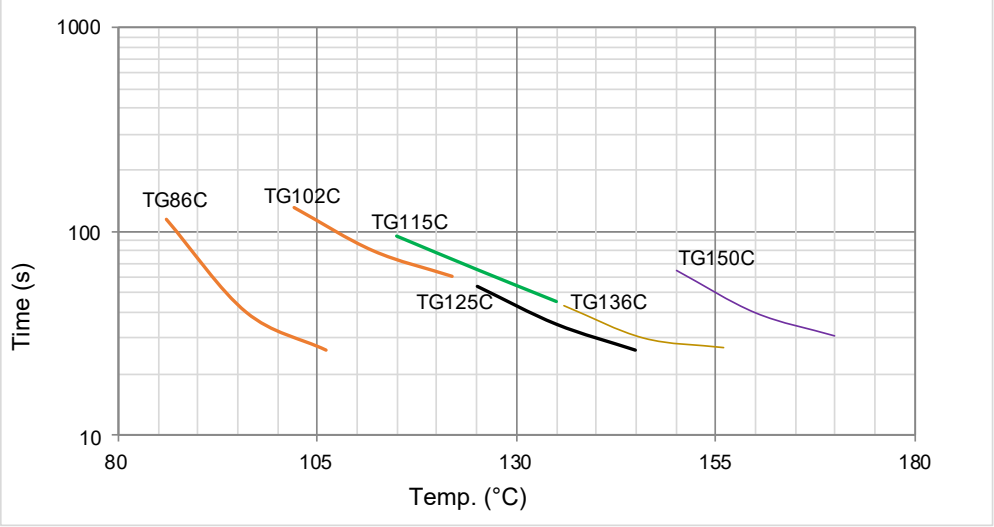


## Current-Time Curve

This is an illustrated curve, describing the opening time at Multi-times rated current in the condition of the room Temp. 25 °C. (This curve is for reference only)

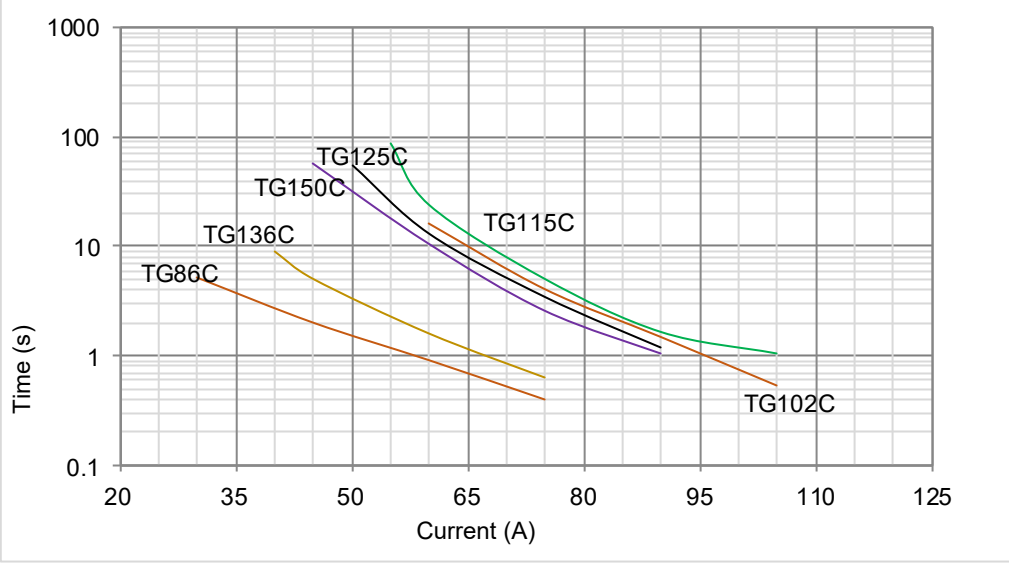



All Rights Reserved by Xiamen SET Electronics Co., Ltd. 2021-2023 V2.0

## Packaging Information

| Item | Tray | PE Bag | Carton |
|---|---|---|---|
| Dimensions (mm) | 295 x 217 x 16 | 295 x 217 x 60 | 455 x 315 x 285 |
| Quantity (PCS) | 70 | 280 | 2240 |
| Gross Weight (kg): | | | 20 ± 10% |

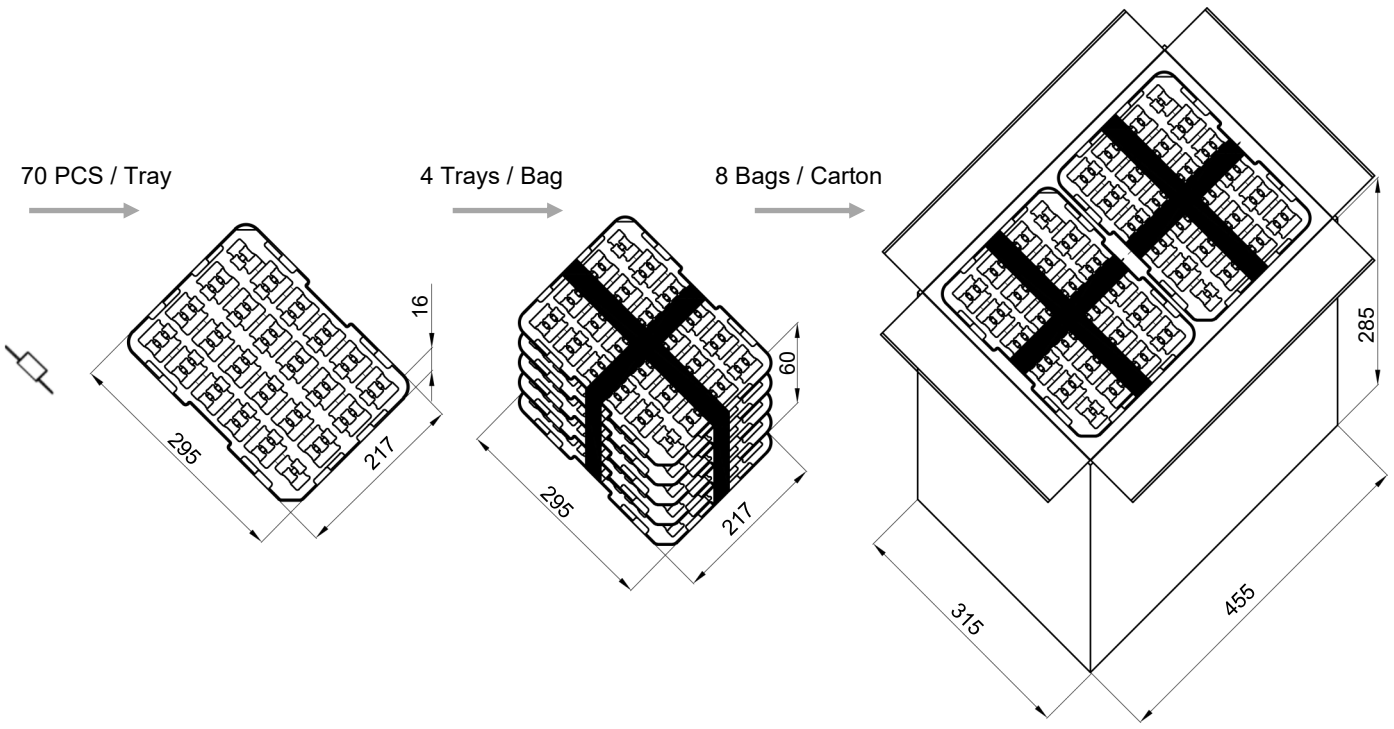



All Rights Reserved by Xiamen SET Electronics Co., Ltd. 2021-2023 V2.0

# DC-ATCO

DC-Alloy Thermal-Link

TS Series $I_r$: 80 / 100A



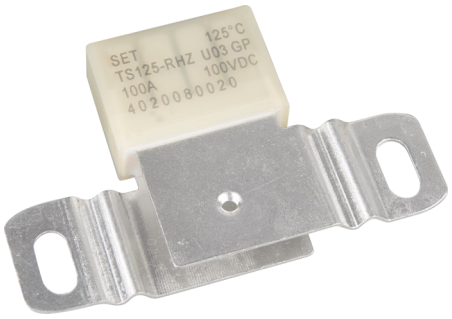


## Features

- High Accuracy of Functioning Temp.
- Non-Resettable
- RoHS & REACH Compliant

## Applications

- EV Battery Modules
- Automatic Electronics

## Structure Diagram

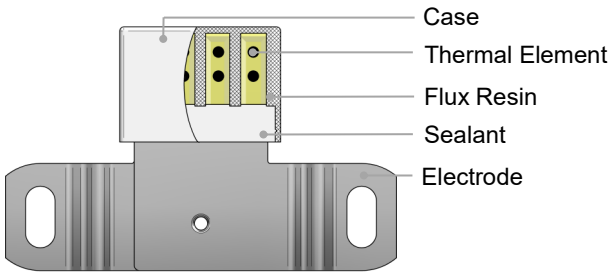


## Customization

- Rated Functioning Temp.
- The Shape of Electrode

## Dimensions (mm)

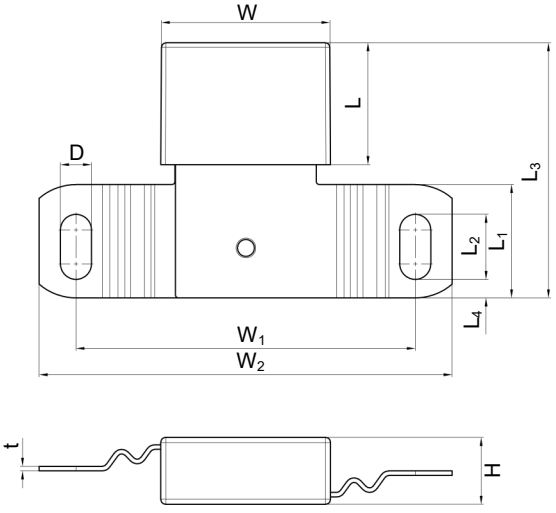


| L | $L_1$ | $L_2$ | $L_3$ | $L_4$ | W | $W_1$ | $W_2$ | D | H | t |
|---|---|---|---|---|---|---|---|---|---|---|
| 21.5±0.5 | 20.0±0.5 | 11.5±0.5 | 45.5±2.0 | 3.25±0.50 | 30.0±0.5 | 60.0±2.0 | 73.0±2.0 | 5.5±0.2 | 11.8±0.5 | 0.80±0.05 |



All Rights Reserved by Xiamen SET Electronics Co., Ltd. 2021-2023 V2.0

# DC-ATCO

DC-Alloy Thermal-Link

TS Series $I_r$: 80 / 100A



## Specifications

| Model | $T_f$ | Fusing Temp. | $T_h$ | $T_m$ | $I_r$ | $U_r$ | UL | cUL | RoHS REACH |
|---|---|---|---|---|---|---|---|---|---|
| | (°C) | (°C) | (°C) | (°C) | (A) | (V) | UL | cUL | |
| TS102-QMZ | 102 | 98 ± 3 | 57 | 180 | 80 | AC 250 | ○ | ○ | ● |
| TS102-RJZ | | | | | 100 | AC 125 | ○ | ○ | ● |
| TS102-RHZ | | | | | 100 | DC 100 | ○ | ○ | ● |
| TS115-QMZ | 115 | 111 ± 3 | 70 | 180 | 80 | AC 250 | ○ | ○ | ● |
| TS115-RJZ | | | | | 100 | AC 125 | ○ | ○ | ● |
| TS115-RHZ | | | | | 100 | DC 100 | ○ | ○ | ● |
| TS125-QMZ | 125 | 121 ± 3 | 80 | 180 | 80 | AC 250 | ● | ● | ● |
| TS125-RJZ | | | | | 100 | AC 125 | ● | ● | ● |
| TS125-RHZ | | | | | 100 | DC 100 | ● | ● | ● |
| TS136-QMZ | 136 | 132 ± 3 | 91 | 180 | 80 | AC 250 | ● | ● | ● |
| TS136-RJZ | | | | | 100 | AC 125 | ● | ● | ● |
| TS136-RHZ | | | | | 100 | DC 100 | ● | ● | ● |



All Rights Reserved by Xiamen SET Electronics Co., Ltd. 2021-2023 V2.0

## Temp.-Time Curve

The functioning temperature time curve of Alloy Thermal-Link in different Temp. oil bath. (This curve is for reference only)

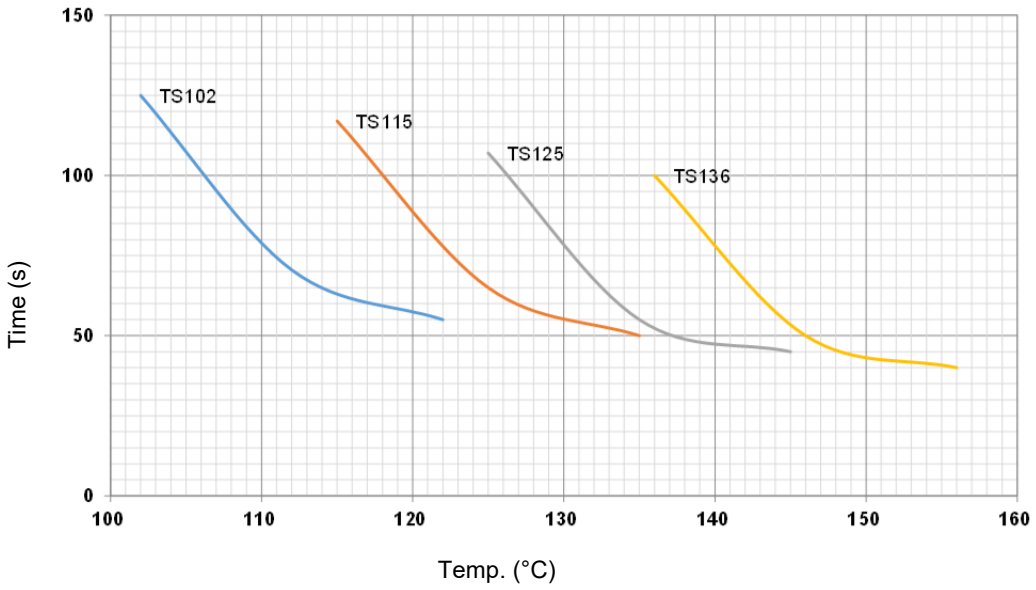


DC-ATCO

## Current-Time Curve

This is an illustrated curve, describing the opening time at Multi-times rated current in the condition of the room Temp. 25 °C. (This curve is for reference only)

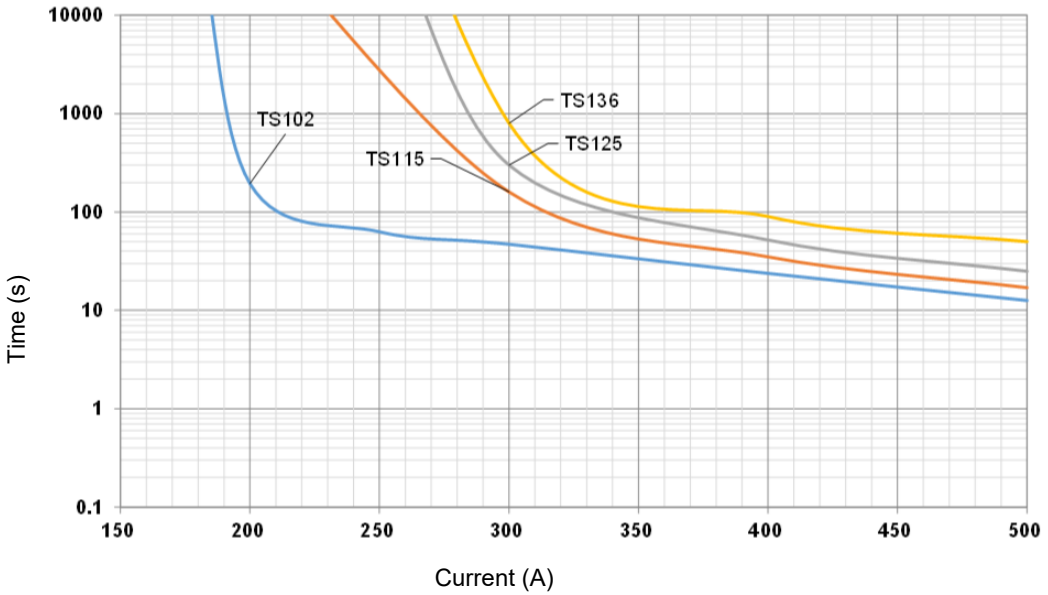



All Rights Reserved by Xiamen SET Electronics Co., Ltd. 2021-2023 V2.0

## Packaging Information



| Item | PE Bag | Box | Carton |
|---|---|---|---|
| Dimensions (mm) | 85 × 0.06 | 165 × 245 × 67 | 355 × 260 × 385 |
| Quantity (PCS) | 8 | 80 | 800 |
| Gross Weight (kg): | | | 27.5 ± 10% |

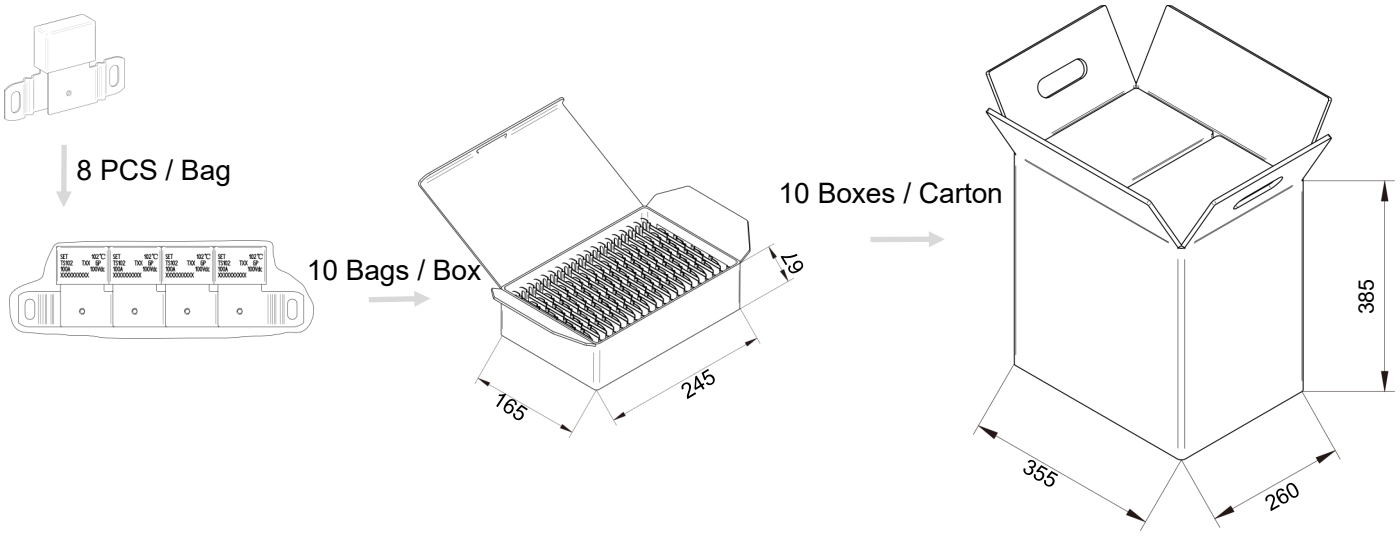




All Rights Reserved by Xiamen SET Electronics Co., Ltd. 2021-2023 V2.0

# DC-ATCO

DC-Alloy Thermal-Link

**TB Series $I_r$: 200A**



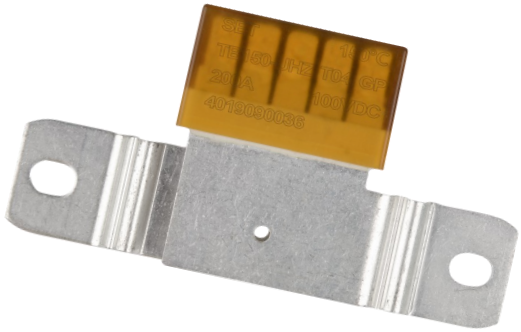

## Features

- High Accuracy of Functioning Temp.
- Non-Resettable
- RoHS & REACH Compliant
- DC 200 A

## Applications

- EV Battery Modules
- Power Supplies

## Structure Diagram

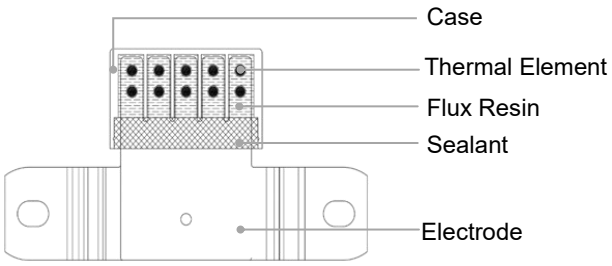


## Customization

- Rated Functioning Temp.
- The Shape of Electrode

## Dimensions (mm)

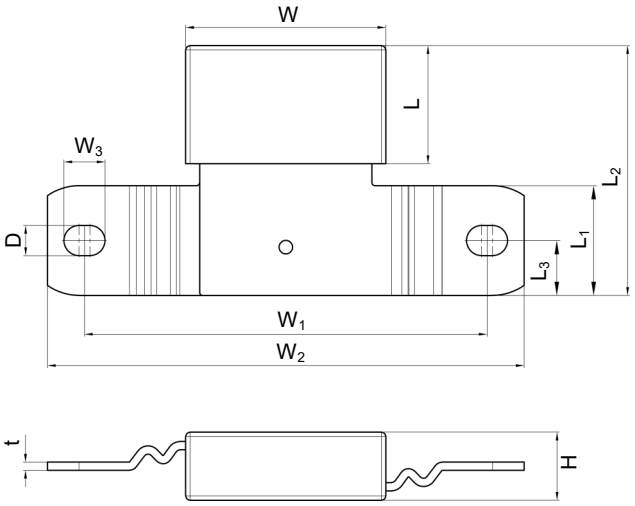


| L | $L_1$ | $L_2$ | $L_3$ | W | $W_1$ | $W_2$ | $W_3$ | D | H | t |
|---|---|---|---|---|---|---|---|---|---|---|
| 21.5 ± 0.5 | 20.0 ± 0.2 | 45.5 ± 2.0 | 10.0 ± 0.2 | 36.5 ± 0.5 | 73.4 ± 2.0 | 86.9 ± 2.0 | 7.50 ± 0.15 | 5.5 ± 0.2 | 12.4 ± 0.5 | 1.50 ± 0.05 |



All Rights Reserved by Xiamen SET Electronics Co., Ltd. 2021-2023 V2.0

# DC-ATCO
DC-Alloy Thermal-Link

TB Series $I_r$: 200A



## Specifications

| Model | $T_f$ | Fusing Temp. | $T_h$ | $T_m$ | $I_r$ | $U_r$ | RoHS / REACH |
|---|---|---|---|---|---|---|---|
| | (°C) | (°C) | (°C) | (°C) | (A) | (V) | |
| TB102-UJZ | 102 | 98 ± 3 | 57 | 180 | 200 | AC 125 | ● |
| TB102-UHZ | | | | | 200 | DC 100 | ● |
| TB115-UJZ | 115 | 111 ± 3 | 70 | 180 | 200 | AC 125 | ● |
| TB115-UHZ | | | | | 200 | DC 100 | ● |
| TB125-UJZ | 125 | 121 ± 3 | 80 | 180 | 200 | AC 125 | ● |
| TB125-UHZ | | | | | 200 | DC 100 | ● |
| TB130-UJZ | 130 | 125 ± 3 | 85 | 180 | 200 | AC 125 | ● |
| TB130-UHZ | | | | | 200 | DC 100 | ● |
| TB136-UJZ | 136 | 131 ± 3 | 91 | 180 | 200 | AC 125 | ● |
| TB136-UHZ | | | | | 200 | DC 100 | ● |

## Current-Time Curve

This is an illustrated curve, describing the opening time at Multi-times rated current in the condition of the room Temp. 25 °C. (This curve is for reference only)

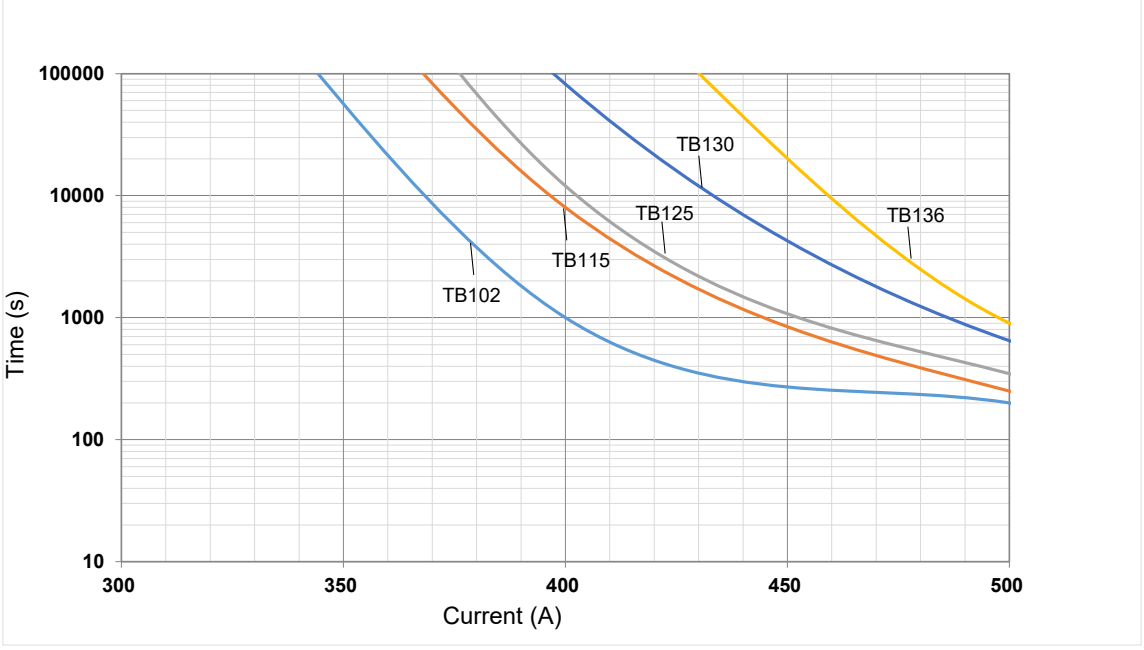



All Rights Reserved by Xiamen SET Electronics Co., Ltd. 2021-2023 V2.0

## Packaging Information



| Item | Tray | Carton |
|---|---|---|
| Dimensions (mm) | 434 × 232 × 18 | 450 × 245 × 200 |
| Quantity (PCS) | 10 | 100 |
| Gross Weight (kg): | | 7.6 ± 10% |

DC-ATCO

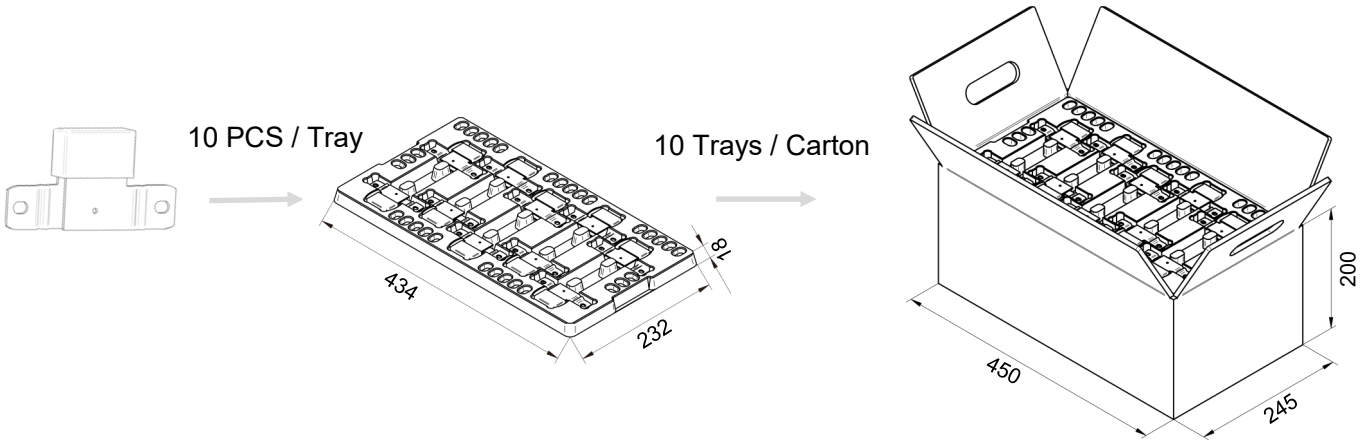



All Rights Reserved by Xiamen SET Electronics Co., Ltd. 2021-2023 V2.0

# DC-ATCO

DC-Alloy Thermal-Link

SLx Series $I_r$ : 25 ~ 80A



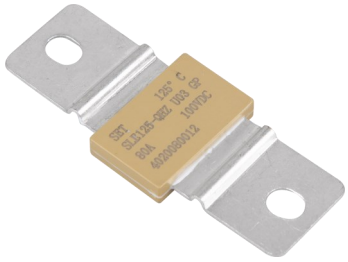

## Features

- High Accuracy of Functioning Temp.
- Non-Resettable
- RoHS & REACH Compliant
- DC 25 A / 30 A / 40 A / 50 A / 60 A / 80 A

## Structure Diagram

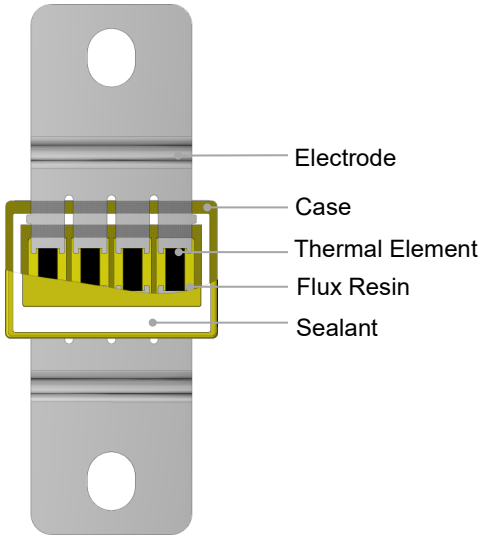


## Applications

- EV Battery Modules
- Heaters
- Power Supplies

## Customization

- Rated Functioning Temp.
- The Shape of Electrode

## Dimensions (mm)

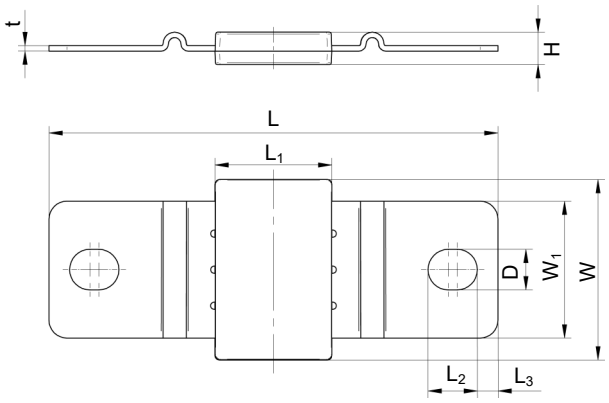


| L | $L_1$ | $L_2$ | $L_3$ | W | $W_1$ | D | H | t |
|---|---|---|---|---|---|---|---|---|
| 50.0 ± 1.0 | 13.0 ± 0.5 | 5.5 ± 0.5 | 2.3 ± 0.2 | 20.0 ± 0.5 | 15.2 ± 0.2 | 4.5 ± 0.2 | 3.6 ± 0.5 | 0.60 ± 0.05 |



All Rights Reserved by Xiamen SET Electronics Co., Ltd. 2021-2023 V2.0

## Specifications

$I_r$: 25 A

| Model | $T_f$ | Fusing Temp. | $T_h$ | $T_m$ | $I_r$ | $U_r$ | RoHS REACH |
|---|---|---|---|---|---|---|---|
| | (°C) | (°C) | (°C) | (°C) | (A) | (V) | |
| SLA102-KHZ | 102 | 98 ± 3 | 57 | 180 | 25 | DC 100 | ● |
| SLA102-KJZ | | | | | 25 | AC 125 | ● |
| SLA115-KHZ | 115 | 111 ± 3 | 70 | 180 | 25 | DC 100 | ● |
| SLA115-KJZ | | | | | 25 | AC 125 | ● |
| SLA125-KHZ | 125 | 121 ± 3 | 80 | 180 | 25 | DC 100 | ● |
| SLA125-KJZ | | | | | 25 | AC 125 | ● |
| SLA136-KHZ | 136 | 132 ± 3 | 91 | 180 | 25 | DC 100 | ● |
| SLA136-KJZ | | | | | 25 | AC 125 | ● |

$I_r$: 30 A

| Model | $T_f$ | Fusing Temp. | $T_h$ | $T_m$ | $I_r$ | $U_r$ | RoHS REACH |
|---|---|---|---|---|---|---|---|
| | (°C) | (°C) | (°C) | (°C) | (A) | (V) | |
| SLB102-LHZ | 102 | 98 ± 3 | 57 | 180 | 30 | DC 100 | ● |
| SLB102-LJZ | | | | | 30 | AC 125 | ● |
| SLB115-LHZ | 115 | 111 ± 3 | 70 | 180 | 30 | DC 100 | ● |
| SLB115-LJZ | | | | | 30 | AC 125 | ● |
| SLB125-LHZ | 125 | 121 ± 3 | 80 | 180 | 30 | DC 100 | ● |
| SLB125-LJZ | | | | | 30 | AC 125 | ● |
| SLB136-LHZ | 136 | 132 ± 3 | 91 | 180 | 30 | DC 100 | ● |
| SLB136-LJZ | | | | | 30 | AC 125 | ● |


All Rights Reserved by Xiamen SET Electronics Co., Ltd. 2021-2023 V2.0

## Specifications

$I_r$: 40 A

| Model | $T_f$ | Fusing Temp. | $T_h$ | $T_m$ | $I_r$ | $U_r$ | RoHS REACH |
|---|---|---|---|---|---|---|---|
| | (°C) | (°C) | (°C) | (°C) | (A) | (V) | |
| SLC102-MHZ | 102 | 98 ± 3 | 57 | 180 | 40 | DC 100 | ● |
| SLC102-MJZ | | | | | 40 | AC 125 | ● |
| SLC115-MHZ | 115 | 111 ± 3 | 70 | 180 | 40 | DC 100 | ● |
| SLC115-MJZ | | | | | 40 | AC 125 | ● |
| SLC125-MHZ | 125 | 121 ± 3 | 80 | 180 | 40 | DC 100 | ● |
| SLC125-MJZ | | | | | 40 | AC 125 | ● |
| SLC136-MHZ | 136 | 132 ± 3 | 91 | 180 | 40 | DC 100 | ● |
| SLC136-MJZ | | | | | 40 | AC 125 | ● |

$I_r$: 50 A

| Model | $T_f$ | Fusing Temp. | $T_h$ | $T_m$ | $I_r$ | $U_r$ | RoHS REACH |
|---|---|---|---|---|---|---|---|
| | (°C) | (°C) | (°C) | (°C) | (A) | (V) | |
| SL102-NHZ | 102 | 98 ± 3 | 57 | 180 | 50 | DC 100 | ● |
| SL102-NJZ | | | | | 50 | AC 125 | ● |
| SL115-NHZ | 115 | 111 ± 3 | 70 | 180 | 50 | DC 100 | ● |
| SL115-NJZ | | | | | 50 | AC 125 | ● |
| SL125-NHZ | 125 | 121 ± 3 | 80 | 180 | 50 | DC 100 | ● |
| SL125-NJZ | | | | | 50 | AC 125 | ● |
| SL136-NHZ | 136 | 132 ± 3 | 91 | 180 | 50 | DC 100 | ● |
| SL136-NJZ | | | | | 50 | AC 125 | ● |


All Rights Reserved by Xiamen SET Electronics Co., Ltd. 2021-2023 V2.0

## Specifications

$I_r$: 60 A

| Model | $T_f$ | Fusing Temp. | $T_h$ | $T_m$ | $I_r$ | $U_r$ | RoHS REACH |
|---|---|---|---|---|---|---|---|
| | (°C) | (°C) | (°C) | (°C) | (A) | (V) | |
| SLD102-PHZ | 102 | 98 ± 3 | 57 | 180 | 60 | DC 100 | ● |
| SLD102-PJZ | | | | | 60 | AC 125 | ● |
| SLD115-PHZ | 115 | 111 ± 3 | 70 | 180 | 60 | DC 100 | ● |
| SLD115-PJZ | | | | | 60 | AC 125 | ● |
| SLD125-PHZ | 125 | 121 ± 3 | 80 | 180 | 60 | DC 100 | ● |
| SLD125-PJZ | | | | | 60 | AC 125 | ● |
| SLD136-PHZ | 136 | 132 ± 3 | 91 | 180 | 60 | DC 100 | ● |
| SLD136-PJZ | | | | | 60 | AC 125 | ● |

$I_r$: 80 A

| Model | $T_f$ | Fusing Temp. | $T_h$ | $T_m$ | $I_r$ | $U_r$ | RoHS REACH |
|---|---|---|---|---|---|---|---|
| | (°C) | (°C) | (°C) | (°C) | (A) | (V) | |
| SLE102-QHZ | 102 | 98 ± 3 | 57 | 180 | 80 | DC 100 | ● |
| SLE102-QJZ | | | | | 80 | AC 125 | ● |
| SLE115-QHZ | 115 | 111 ± 3 | 70 | 180 | 80 | DC 100 | ● |
| SLE115-QJZ | | | | | 80 | AC 125 | ● |
| SLE125-QHZ | 125 | 121 ± 3 | 80 | 180 | 80 | DC 100 | ● |
| SLE125-QJZ | | | | | 80 | AC 125 | ● |
| SLE136-QHZ | 136 | 132 ± 3 | 91 | 180 | 80 | DC 100 | ● |
| SLE136-QJZ | | | | | 80 | AC 125 | ● |


All Rights Reserved by Xiamen SET Electronics Co., Ltd. 2021-2023 V2.0

## Temp.-Time Curve

The functioning temperature time curve of Alloy Thermal-Link in different Temp. oil bath. (This curve is for reference only)

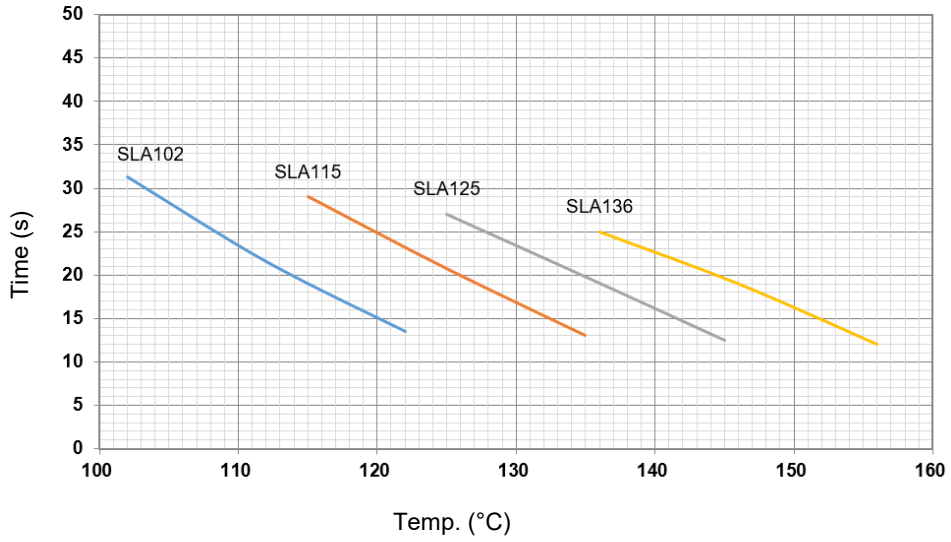


## Current-Time Curve

This is an illustrated curve, describing the opening time at Multi-times rated current in the condition of the room Temp. 25 °C. (This curve is for reference only)

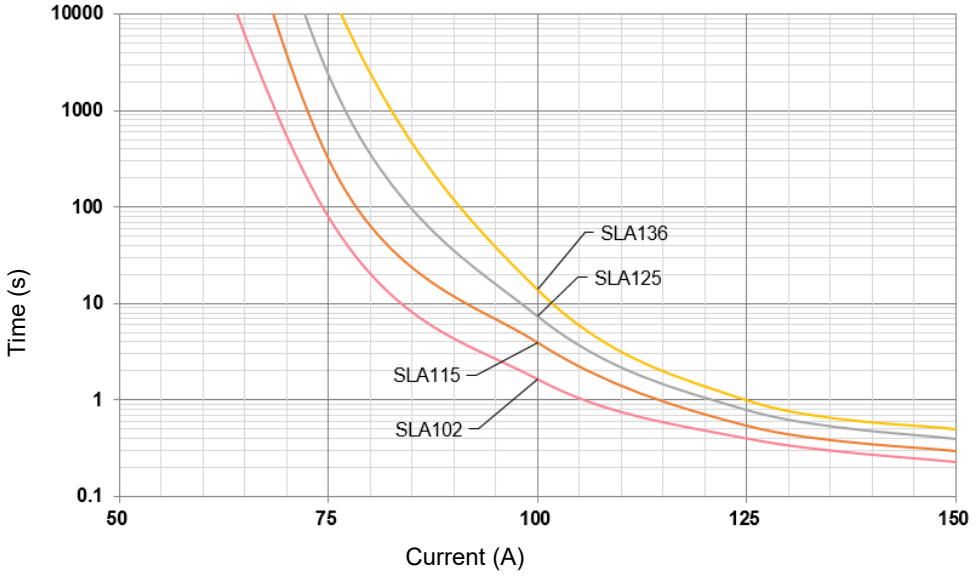



All Rights Reserved by Xiamen SET Electronics Co., Ltd. 2021-2023 V2.0

## Temp.-Time Curve

The functioning temperature time curve of Alloy Thermal-Link in different Temp. oil bath. (This curve is for reference only)

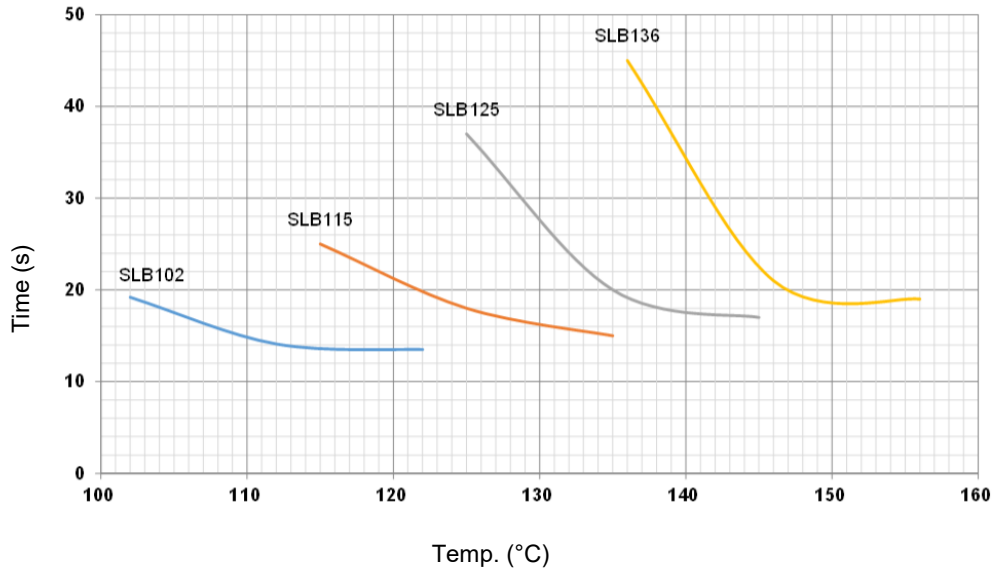


DC-ATCO

## Current-Time Curve

This is an illustrated curve, describing the opening time at Multi-times rated current in the condition of the room Temp. 25 °C. (This curve is for reference only)

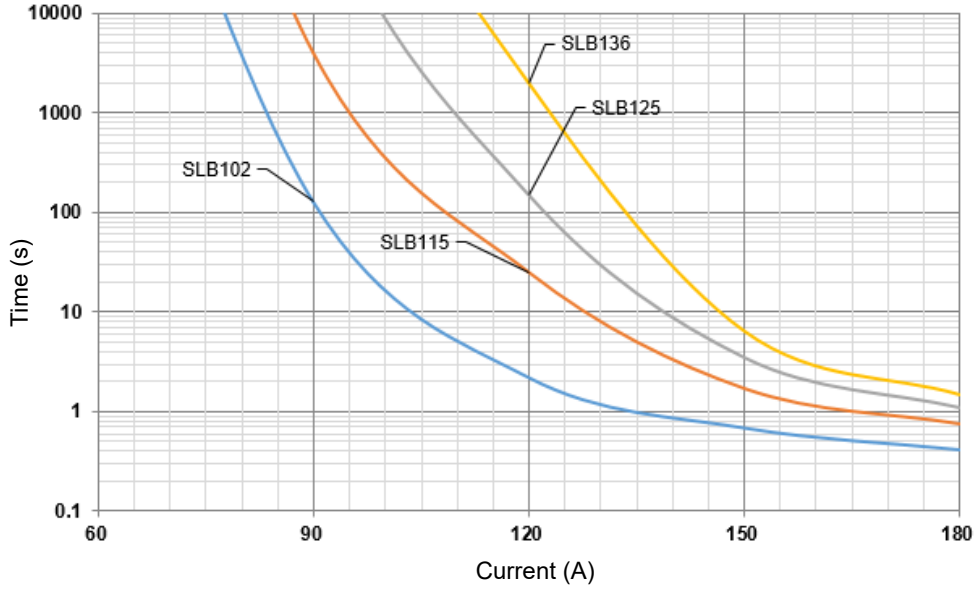



All Rights Reserved by Xiamen SET Electronics Co., Ltd. 2021-2023 V2.0

## Temp.-Time Curve

The functioning temperature time curve of Alloy Thermal-Link in different Temp. oil bath. (This curve is for reference only)

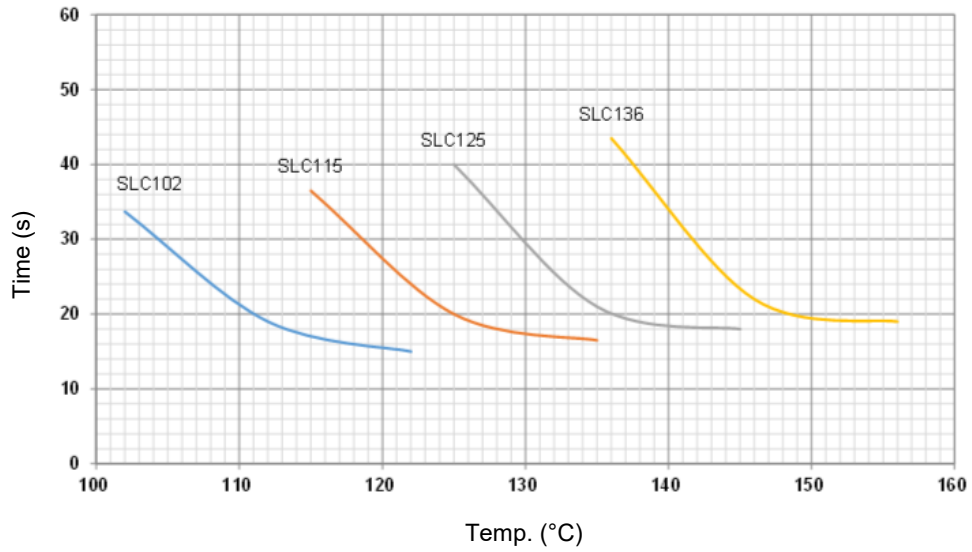


DC-ATCO

## Current-Time Curve

This is an illustrated curve, describing the opening time at Multi-times rated current in the condition of the room Temp. 25 °C. (This curve is for reference only)

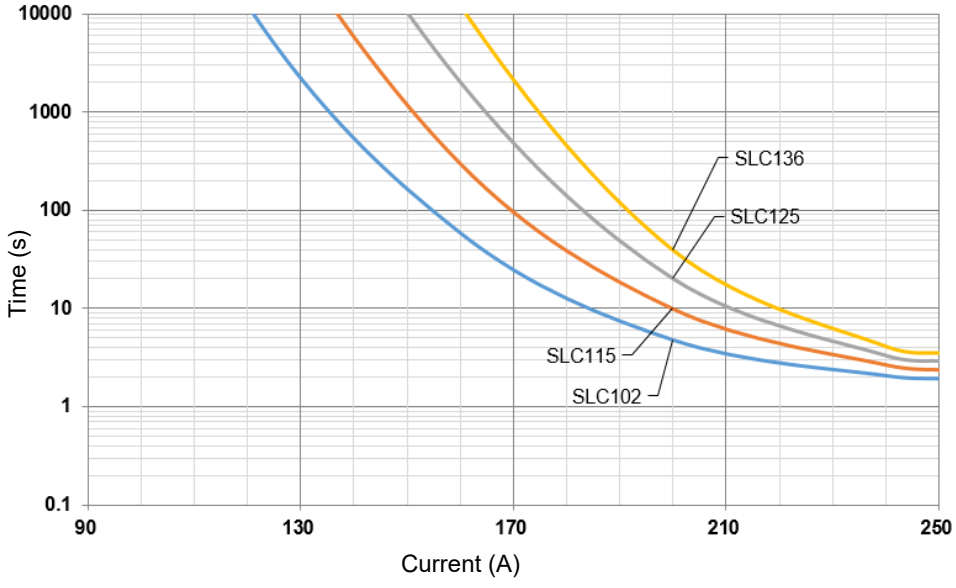




All Rights Reserved by Xiamen SET Electronics Co., Ltd. 2021-2023 V2.0

## Temp.-Time Curve

The functioning temperature time curve of Alloy Thermal-Link in different Temp. oil bath. (This curve is for reference only)

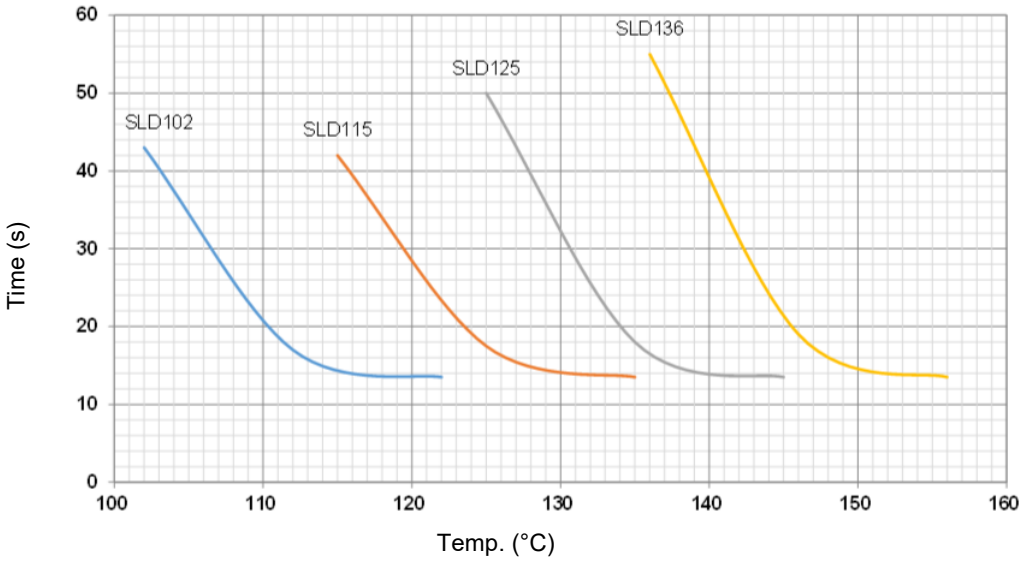


DC-ATCO

## Current-Time Curve

This is an illustrated curve, describing the opening time at Multi-times rated current in the condition of the room Temp. 25 °C. (This curve is for reference only)

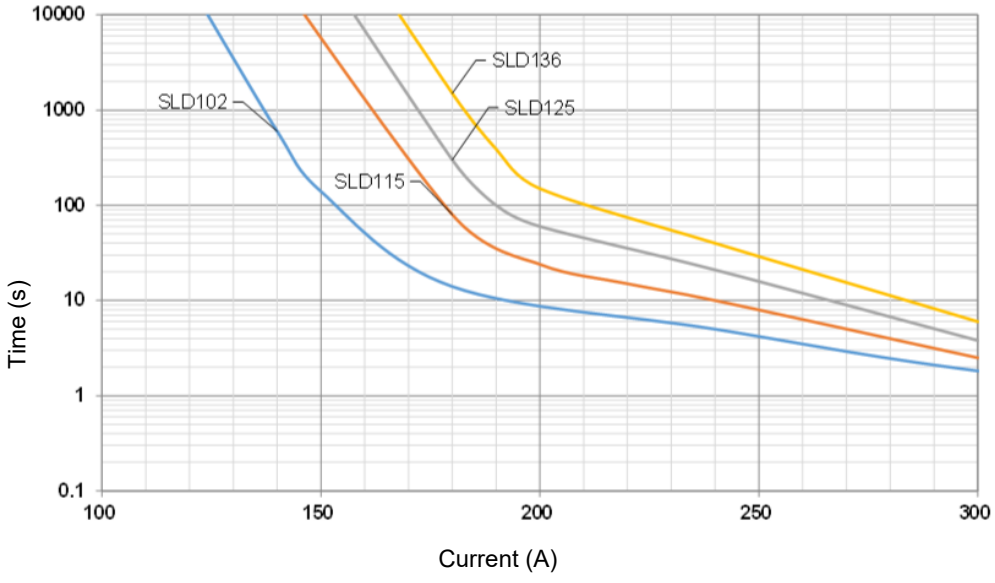



All Rights Reserved by Xiamen SET Electronics Co., Ltd. 2021-2023 V2.0

## Temp.-Time Curve

The functioning temperature time curve of Alloy Thermal-Link in different Temp. oil bath. (This curve is for reference only)

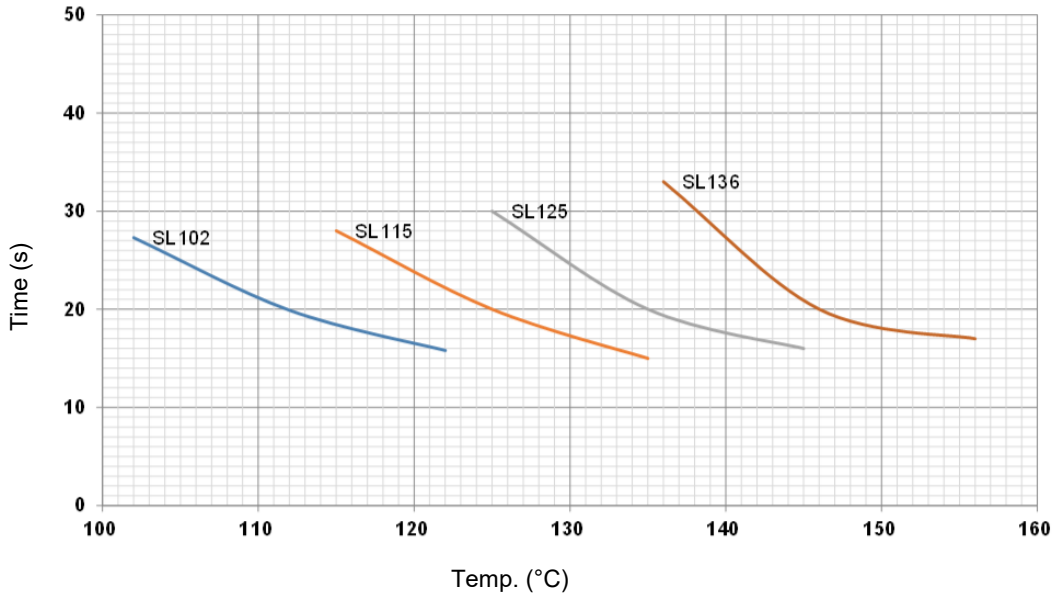


DC-ATCO

## Current-Time Curve

This is an illustrated curve, describing the opening time at Multi-times rated current in the condition of the room Temp. 25 °C. (This curve is for reference only)

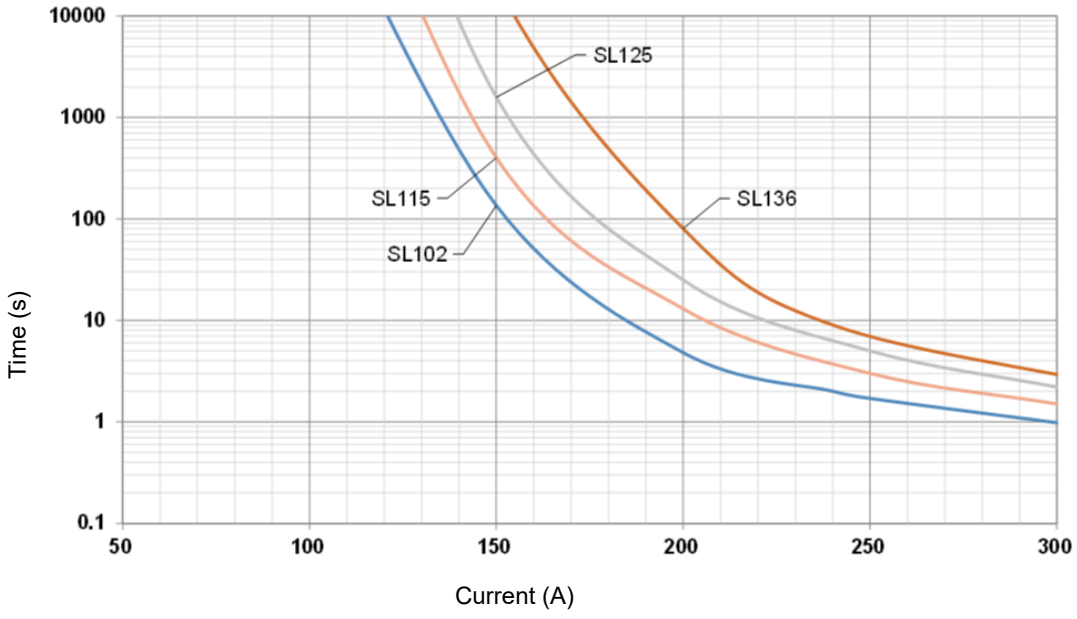



All Rights Reserved by Xiamen SET Electronics Co., Ltd. 2021-2023 V2.0

## Temp.-Time Curve

The functioning temperature time curve of Alloy Thermal-Link in different Temp. oil bath. (This curve is for reference only)

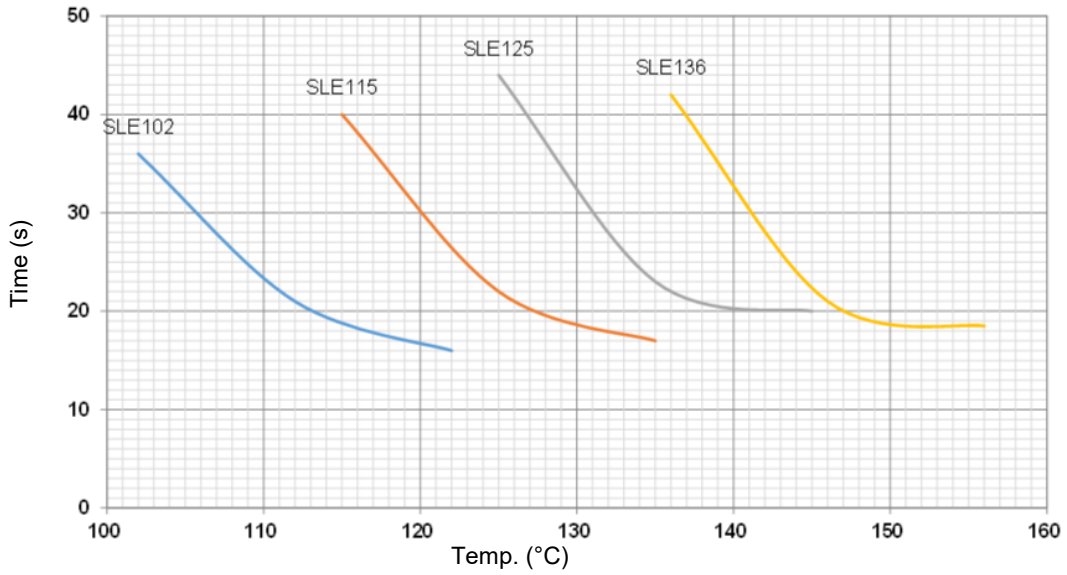


## Current-Time Curve

This is an illustrated curve, describing the opening time at Multi-times rated current in the condition of the room Temp. 25 °C. (This curve is for reference only)

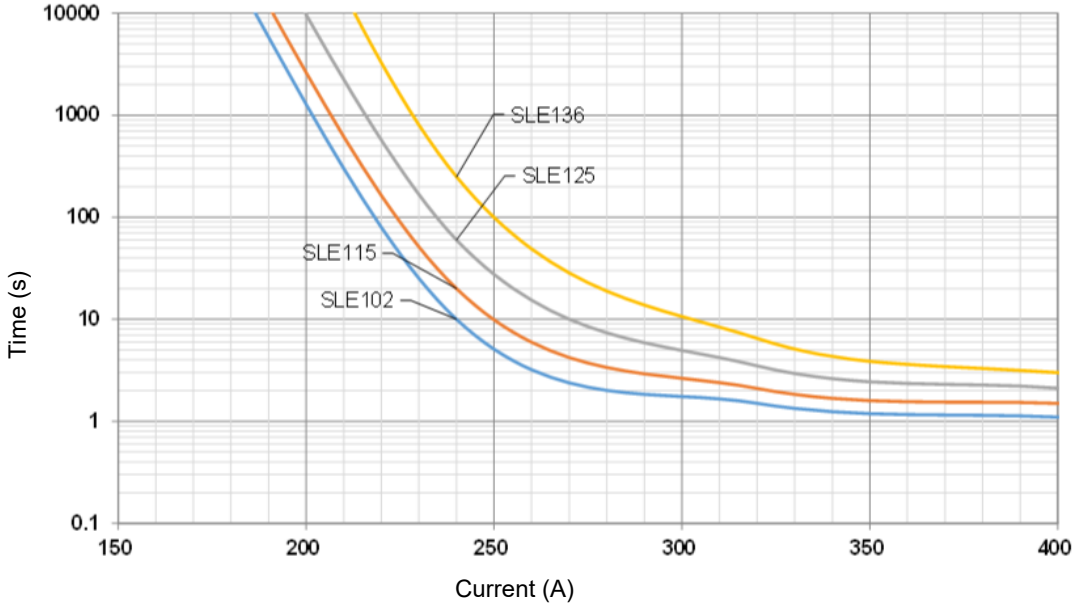




All Rights Reserved by Xiamen SET Electronics Co., Ltd. 2021-2023 V2.0

## Packaging Information

| Item | Box | Carton |
|---|---|---|
| Dimensions (mm) | 145 × 107 × 47 | 314 × 239 × 160 |
| Quantity (PCS) | 40 | 480 |
| Gross Weight (kg): | | 3.3 ± 10% |

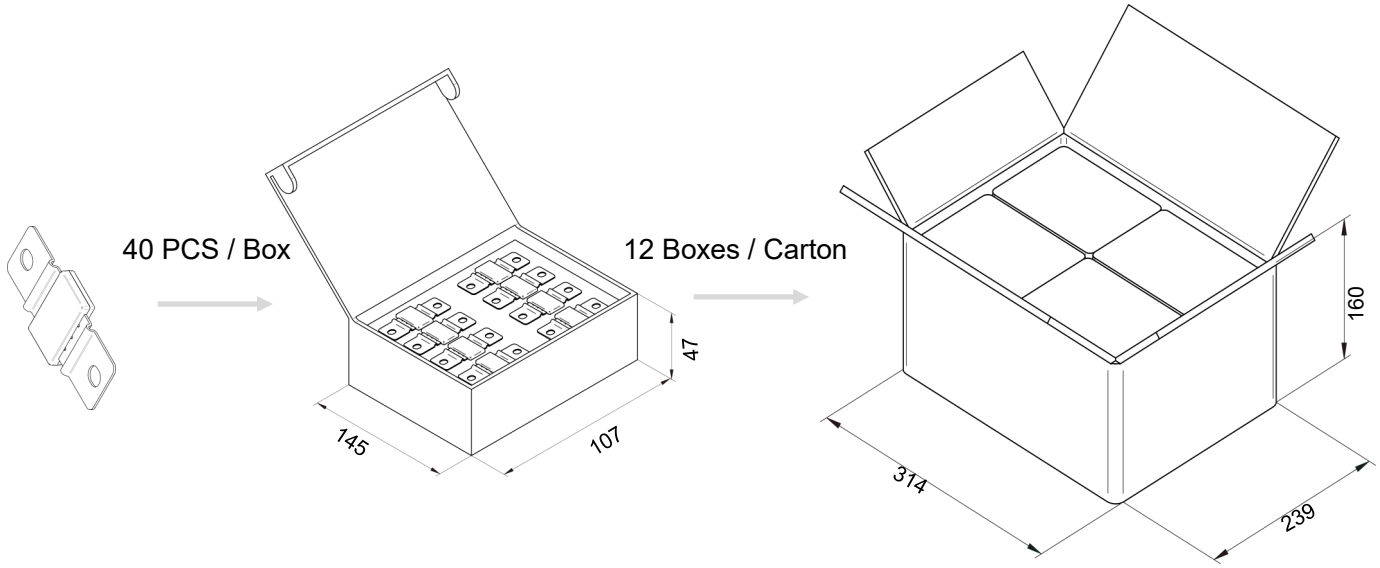



All Rights Reserved by Xiamen SET Electronics Co., Ltd. 2021-2023 V2.0

# DC-ATCO

DC-Alloy Thermal-Link

**TVB Series $I_r$: 50A**

## Features

- High Accuracy of Functioning Temp.
- Non-Resettable
- RoHS & REACH Compliant
- DC 50 A
- Meet UN 38.3 standard

## Structure Diagram

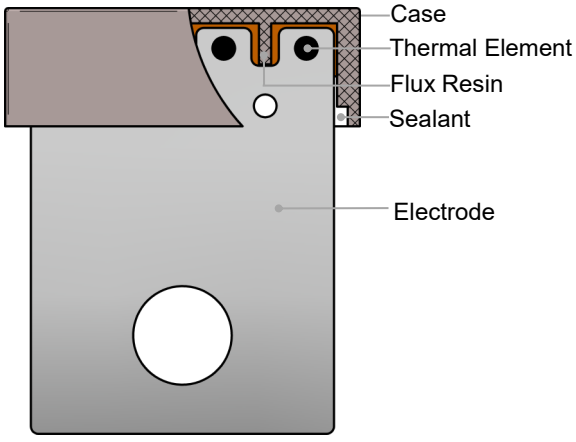


## Applications

- EV Battery Modules
- High Power Solid State Relays

## Customization

- Rated Functioning Temp.
- The Shape of Electrode

## Dimensions (mm)

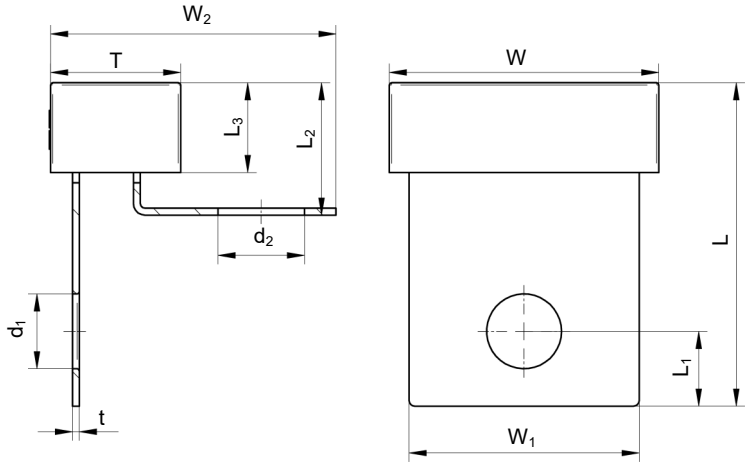


| L | $L_1$ | $L_2$ | $L_3$ | W | $W_1$ | $W_2$ | T | t | $d_1$ | $d_2$ |
|---|---|---|---|---|---|---|---|---|---|---|
| 28.0 ± 0.5 | 6.5 ± 0.2 | 11.5 ± 0.7 | 7.8 ± 0.5 | 23.4 ± 0.5 | 20.0 ± 0.5 | 24.8 ± 0.5 | 11.3 ± 0.5 | 0.60 ± 0.05 | 6.5 ± 0.1 | 7.5 ± 0.1 |



All Rights Reserved by Xiamen SET Electronics Co., Ltd. 2021-2023 V2.0

## Specifications

| Model | $T_f$ | Fusing Temp. | $T_h$ | $T_m$ | $I_r$ | $U_r$ | RoHS REACH |
|---|---|---|---|---|---|---|---|
| | (°C) | (°C) | (°C) | (°C) | (A) | (V) | |
| TVB102-NEZ | 102 | 98 ± 3 | 61 | 180 | 50 | 60 | ● |
| TVB115-NEZ | 115 | 111 ± 3 | 70 | 180 | 50 | 60 | ● |
| TVB125-NEZ | 125 | 121 ± 3 | 80 | 180 | 50 | 60 | ● |
| TVB136-NEZ | 136 | 132 ± 3 | 91 | 180 | 50 | 60 | ● |


DC-ATCO


All Rights Reserved by Xiamen SET Electronics Co., Ltd. 2021-2023 V2.0

## Temp.-Time Curve

The functioning temperature time curve of Alloy Thermal-Link in different Temp. oil bath. (This curve is for reference only)

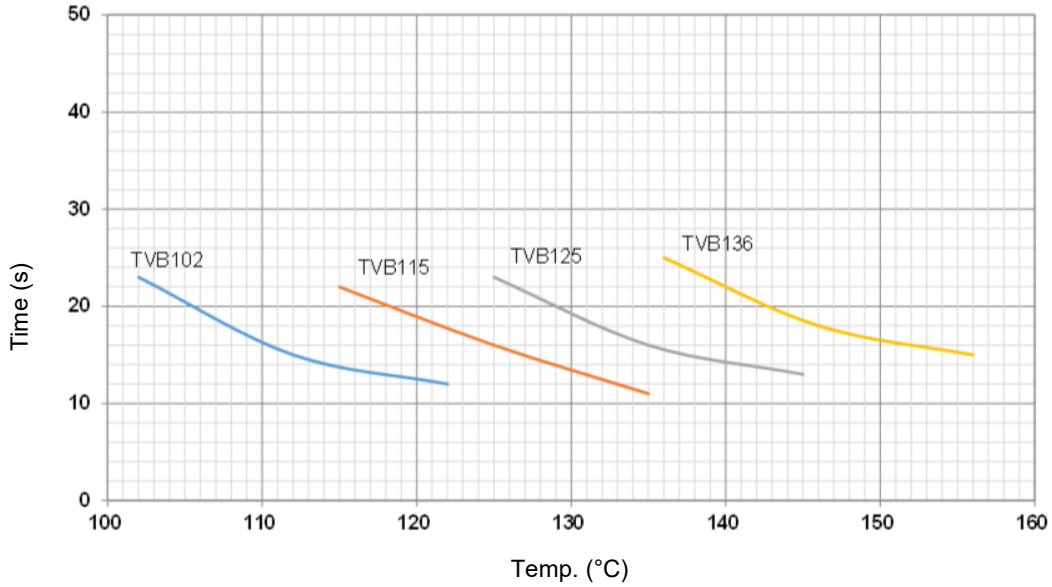


DC-ATCO

## Current-Time Curve

This is an illustrated curve, describing the opening time at Multi-times rated current in the condition of the room Temp. 25 °C. (This curve is for reference only)

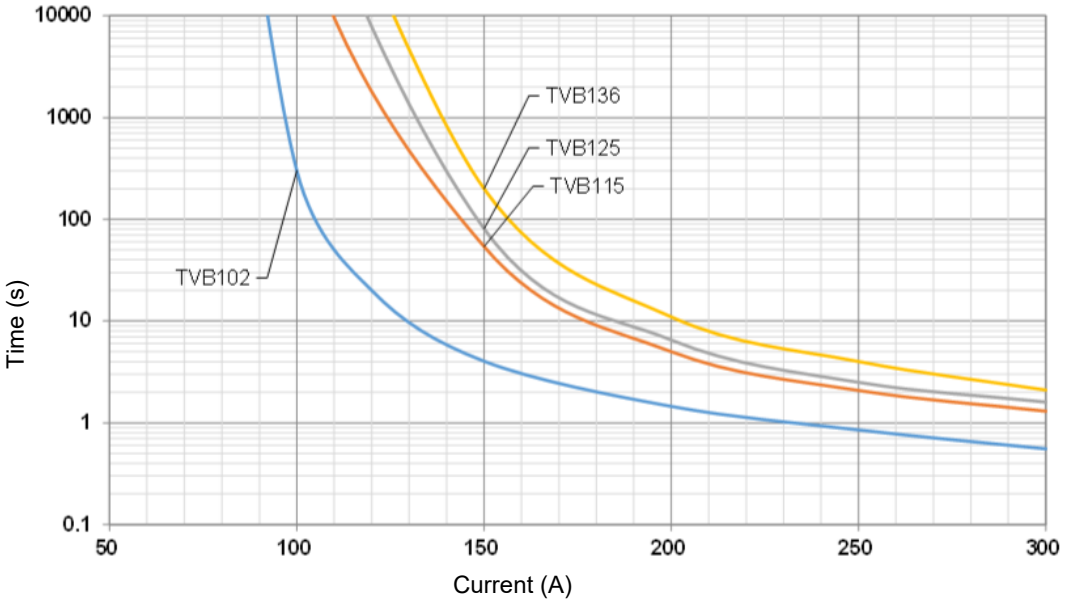



All Rights Reserved by Xiamen SET Electronics Co., Ltd. 2021-2023 V2.0

## Packaging Information

| Item | Box | Carton |
|---|---|---|
| Dimensions (mm) | 245 × 165 × 67 | 355 × 260 × 385 |
| Quantity (PCS) | 100 | 1000 |
| Gross Weight (kg): | | 9.8 ± 10% |

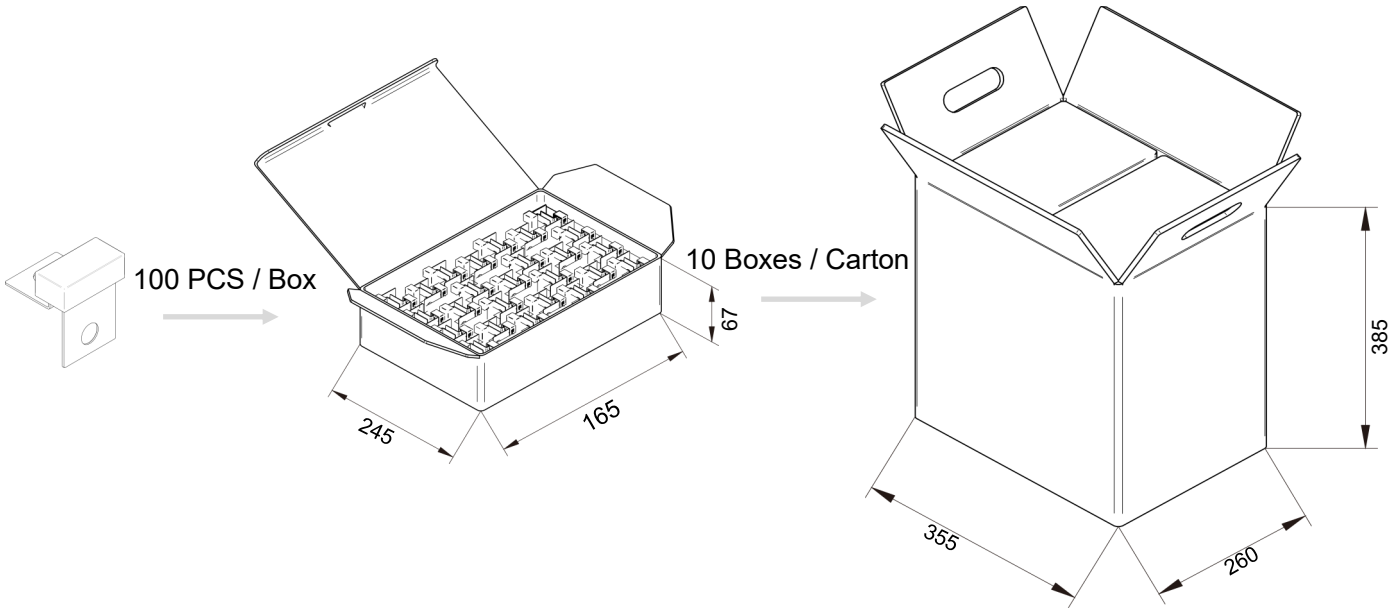


DC-ATCO



All Rights Reserved by Xiamen SET Electronics Co., Ltd. 2021-2023 V2.0

**21**

21 YEARS OF DESIGNING, MANUFACTURING AND SELLING OF CIRCUIT PROTECTION COMPONENTS

**>40**

SOLD TO MORE THAN 40 COUNTRIES AND REGIONS

**Automatic**

AUTOMATIC PROCESS PRODUCTION

**500**

A BRAND CHOSEN BY FORTUNE 500 COMPANIES

NO. 8067, 8001 West Xiang'an Road,Torch High-tech industrial District,Xiang'an 361101 Xiamen P.R. China
www.SETsafe.com www.SETfuse.com
Tel:+ 86-592-5715-838 sales@SETfuse.com

SETsafe | SETfuse

All Rights Reserved by Xiamen SET Electronics Co., Ltd. 2021-2023