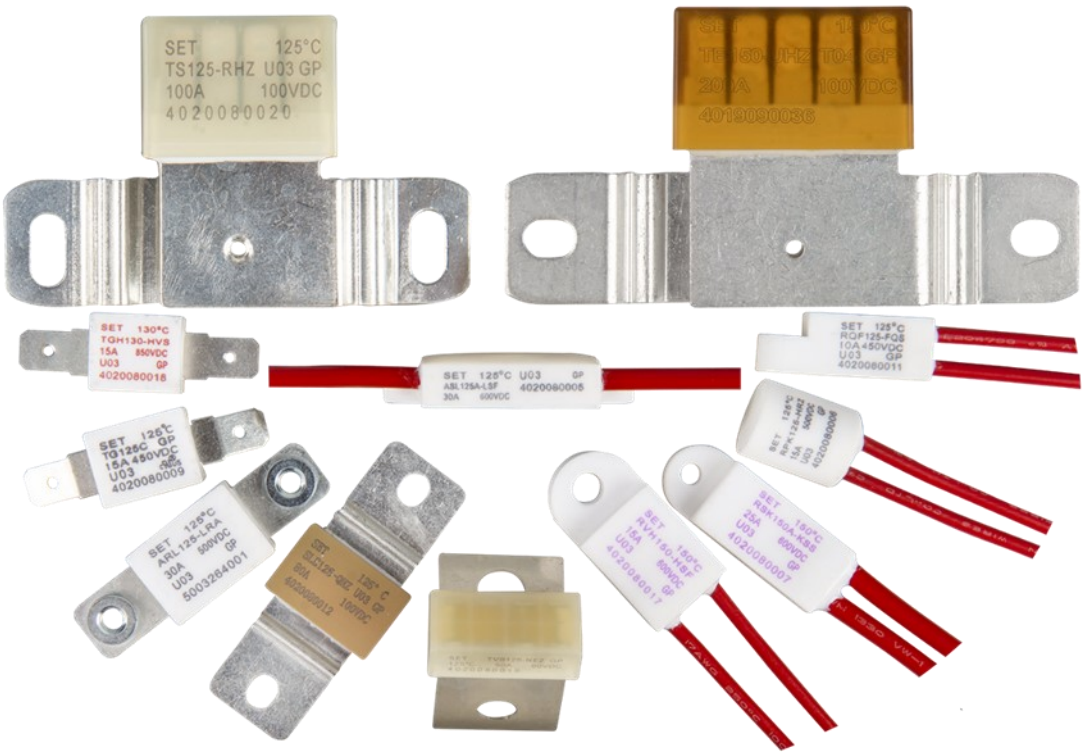

Features

Low Impedance, Low Power Consumption

Non-Resettable

Over Temp. Protection

Superior Vibration Resistance

RoHS & REACH Compliant

Rated Current：(10 to 200) A

Rated Voltage: (60 to 850) VDC

Rated Functioning Temp. : (76 to 230) °C

Patented product

All Rights Reserved by Xiamen SET Electronics Co., Ltd. 2021-2023 V2.1

Thermal-Link (DC-ATCO) Features & Model List Overview

Rated Functioning Temp. T_f (°C)	Page						
200	○	○	○	○	○	○	○
187	○	RQF187-FQS	○	○	RSK187A-KSS	ARL187-LRA	RVH187-HSF
160	○	○	○	○	○	○	○
150	TG150C-JPZ	RQF150-FQS	TG150C-HQZ	RPK150-HRZ	RSK150A-KSS	ARL150-LRA	RVH150-HSF
145	○	○	○	○	○	○	○
139	○	○	○	○	○	○	○
136	TG136C-JPZ	RQF136-FQS	TG136C-HQZ	RPK136-HRZ	RSK136A-KSS	ARL136-LRA	RVH136-HSF
135	○	○	○	○	○	○	○
133	○	○	○	○	○	○	○
130	○	RQF130-FQS	○	○	○	○	RVH130-HSF
125	TG125C-JPZ	RQF125-FQS	TG125C-HQZ	RPK125-HRZ	RSK125A-KSS	ARL125-LRA	RVH125-HSF
123	○	○	○	○	○	○	○
120	○	○	○	○	○	○	○
115	TG115C-JPZ	RQF115-FQS	TG115C-HQZ	RPK115-HRZ	RSK115A-KSS	ARL115-LRA	RVH115-HSF
105	○	○	○	○	○	○	○
102	TG102C-JPZ	RQF102-FQS	TG102C-HQZ	RPK102-HRZ	RSK102A-KSS	ARL102-LRA	RVH102-HSF
97	○	○	○	○	○	○	○
95	○	○	○	○	○	○	○
86	○	RQF86-FQS	TG86C-HQZ	○	○	ARL86-LRA	○
76	○	○	○	○	○	○	○
$I_{r(A)}$ Rated Current	20	10	15	15	25	30	15
$U_{r(VDC)}$ Rated Voltage	400	450		500	600	500	600
Product Structure	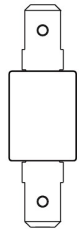		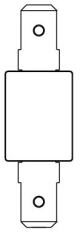	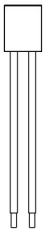		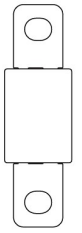	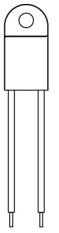
	Axial Shape	Radial Shape	Axial Shape	Radial Shape		Axial Shape	Radial Shape

Model

+86-592-571-5838 www.SETfuse.com www.SETsafe.com E-mail : sales@SETfuse.com

All Rights Reserved by Xiamen SET Electronics Co., Ltd. 2021-2023 V2.1

SETsafe | SETfuse

Thermal-Link (DC-ATCO) Features & Model List Overview

Rated Functioning Temp. T_f (°C) \ Page								
200	○	○	○	○	○	○	○	○
187	ASL187A-LSF	TGH187-HVS	○	○	○	○	○	○
160	○	○	○	○	○	○	○	○
150	ASL150A-LSF	TGH150-HVS	○	TG150C-JSZ	○	○	○	○
145	○	○	○	○	○	○	○	○
139	○	○	○	○	○	○	○	○
136	ASL136A-LSF	TGH136-HVS	○	TG136C-JSZ	TB136-UHZ	TS136-RHZ	TB136-UJZ	TS136-RJZ
135	○	○	○	○	○	○	○	○
133	○	○	○	○	○	○	○	○
130	○	TGH130-HVS	○	○	TB130-UHZ	○	TB130-UJZ	○
125	ASL125A-LSF	TGH125-HVS	○	TG125C-JSZ	TB125-UHZ	TS125-RHZ	TB125-UJZ	TS125-RJZ
123	○	○	○	○	○	○	○	○
120	○	○	○	○	○	○	○	○
115	ASL115A-LSF	TGH115-HVS	○	TG115C-JSZ	TB115-UHZ	TS115-RHZ	TB115-UJZ	TS115-RJZ
105	○	○	○	○	○	○	○	○
102	ASL102A-LSF	TGH102-HVS	○	TG102C-JSZ	TB102-UHZ	TS102-RHZ	TB102-UJZ	TS102-RJZ
97	○	○	○	○	○	○	○	○
95	○	○	○	○	○	○	○	○
86	○	○	TG86C-HSZ	○	○	○	○	○
76	○	○	○	○	○	○	○	○
I_r (A) Rated Current	30	15	15	20	200	100	200	100
U_r (VDC),(VAC) Rated Voltage	600 (VDC)	850 (VDC)	600 (VAC)		100 (VDC)		125 (VAC)	
Product Structure		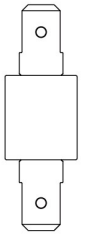	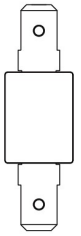		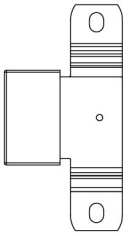	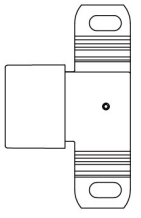	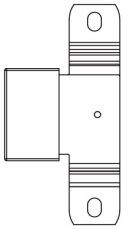	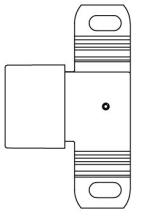
	Radial Shape	Axial Shape			Radial Shape			

Model

+86-592-571-5838 www.SETfuse.com www.SETsafe.com E-mail : sales@SETfuse.com

All Rights Reserved by Xiamen SET Electronics Co., Ltd. 2021-2023 V2.1

SETsafe | SETfuse

Description

DC-Alloy Thermal-Link / DC-Alloy Thermal Cutoff (DC-ATCO) is defined as a non-resettable protective device functioning one time only. It is widely used in electrical equipment and electric vehicle. DC-ATCO is mainly consist of Thermal Element, Flux Resin, Case, Sealant and Lead Wires. Normally, thermal element is jointed to the two lead wires. Under abnormal conditions, when the temp. reaches to the fusing temp. of DC-ATCO, the thermal element melts and quickly retracts to the two lead wire ends with the aid of the flux resin and disconnects the circuit completely.

SETsafe | SETfuse DC-Alloy Thermal-Link is classified into Axial and Radial shapes, with Rated Current 10 A to 200 A, Rated Functioning Temp. 76 °C to 230 °C, with UL, cUL Approvals and RoHS, REACH compliant.

ATCO

Structure

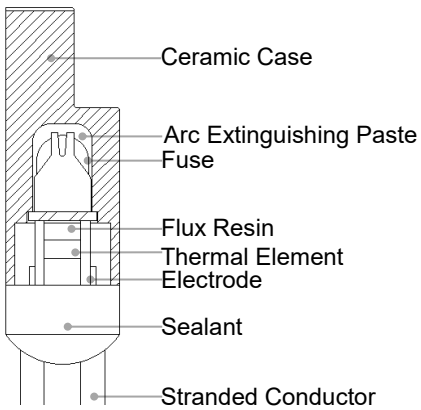

Axial Shape

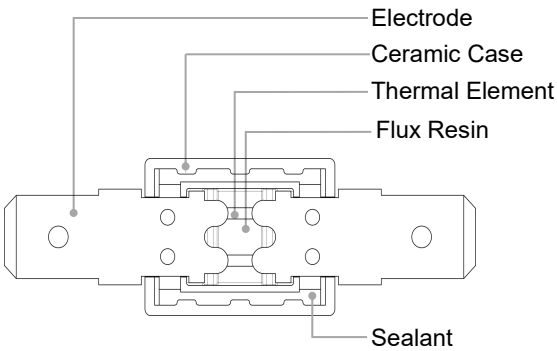

Radial Shape

Marking

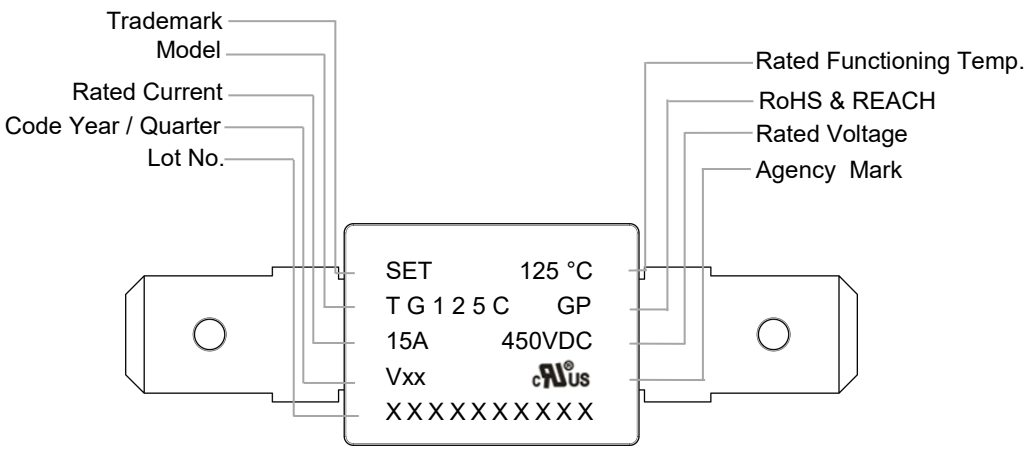

All Rights Reserved by Xiamen SET Electronics Co., Ltd. 2021-2023 V2.1

Part Number System

DC-ATCO-TG125C - H Q Z

Minimum Breaking Current (A)
Z:Without Inbuilt Fuse

Rated Voltage and Rated Current

HQ:	15 A	450 VDC	
JP:	20 A	400 VDC	(Just for 102 ºC to 150 ºC)
HS:	15 A	600 VAC	(Just for 86 ºC)
JS:	20 A	600 VAC	(Just for 102 ºC to 150 ºC)

Functioning Temp. (ºC)
86
102
115
125
136
150

Series
TGxxxC

Product Category
DC-Alloy Thermal-Link

ATCO

All Rights Reserved by Xiamen SET Electronics Co., Ltd. 2021-2023 V2.1

Glossary

Item	Description
TCO	**Thermal-Link** A non-resettable device incorporating a thermal element which will open a circuit once only when exposed for a sufficient length of time to a temperature in excess of that for which it has been designed.
ATCO	**Alloy Thermal-Link** Alloy Type Thermal-Link, Alloy is the thermal element.
DC-ATCO	**DC-Alloy Thermal-Link** DC-Alloy type Thermal-Link, Alloy is thermal element.
T_f	**Rated Functioning Temp.** The temperature of the Thermal-Link which causes it to change the state of conductivity with a detection current up to 10 mA as the only load. Tolerance: T_f 0 / -10 °C (GB 9816, EN 60691, K60691). Tolerance: T_f ± 7 °C (J60691).
Fusing Temp.	**Fusing Temp.** The temperature of the Alloy Thermal-Link which causes it to change its state of conductivity is measured with silicone oil bath in which the temperature is increased at the rate of 0.5 °C to 1 °C / minute, with a detection current up to 10 mA as the only load.
T_h	**Holding Temp.** The Maximum temperature at which a Thermal-Link will not change its state of conductivity when conducting rated current for 168 hours.
T_m	**Maximum Temp. Limit** The temperature of the Thermal-Link stated by the manufacturer, up to which the mechanical and electrical properties of the Thermal-Link having changed its state of conductivity, will not be impaired for a given time.
I_{min}	**Minimum Breaking Current** The minimum current that Fuse requires after the Alloy of Thermal-Link opens in the circuit.
I_r	**Rated Current** The current used to classify a Thermal-Link, which is the maximum current that Thermal-Link allows to carry and is able to cut off the circuit safely.
U_r	**Rated Voltage** The voltage used to classify a Thermal-Link, which is the maximum voltage that Thermal-link allows to carry and is able to cut off the circuit safely.

ATCO

All Rights Reserved by Xiamen SET Electronics Co., Ltd. 2021-2023 V2.1

ATCO

ATTENTION

Usage

1. When atmosphere pressure is from 80 kPa to 106 kPa, the related altitude shall be from +2000 m to - 500 m.
2. Operating voltage less than rated voltage of DC-ATCO, operating current less than rated current of DC-ATCO.
3. Do not touch the DC-ATCO body or lead wires directly when power is on, to avoid burn or electric shock.

Replacement

DC-ATCO is a non-repairable product. For safety sake, it shall be replaced by an equivalent DC-ATCO from the same manufacturer, and mounted in the same way.

Storage

Do not store the DC-ATCO at the high temp., high humidity or corrosive gas environment. The product shall be stored at 25 ± 5 °C and ≤ 70% RH, avoid direct sunlight and shall use them up within 1 year after receiving the goods.

Installation

Make Sure the Temp. of Installation Position

1. It is recommended that a dummy DC-ATCO with inbuilt thermo-couple shall be used to determine the proper temp.
2. he terminal product should be tested to ensure that potential abnormal conditions do not cause ambient temp. to exceed the T_m of the DC-ATCO.
3. Mount the DC-ATCO at the location where temp. rises evenly.

Installation position of mechanical performance requirements

1. Ensure that the lead wire is long enough, and avoid actions such as press, tensile or twist.
2. The seal or body of DC-ATCO must not be damaged, burned or over heated.

All Rights Reserved by Xiamen SET Electronics Co., Ltd. 2021-2023 V2.1

Mechanical Connection

Riveting

1. Choose small resistivity riveting material and be riveted.
2. A flexible lead or lead with low resistance should be used to rivet the DC-ATCO.
3. Contact resistance should be minimal, Large contact resistance will lead to higher temp., DC-ATCO Functioning in advance.

Soldering

Hand-Soldering

1. Soldering should be carried out according to Table T-1.
2. The thermal element of DC-ATCO is thermal element with low melting point, which is jointed with DC-ATCO lead wires. Improper soldering operation (too high soldering temp. , too long soldering time, too short lead wire etc.) may transfer more heat to the thermal element and DC-ATCO may open in advance.
3. When soldering conditions are more severe than those listed in Table T-1, a heat sink fixture should be used between soldering point and DC-ATCO body.
4. When soldering, please do not pull / push or twist DC-ATCO body or lead wires.
5. After soldering, let it naturally cool for longer than 20 seconds. During cooling, never move the DC-ATCO body or lead wires.

TABLE T-1 Hand-Soldering Time

Rated Functioning Temp. (T_f)	Max. Allowable Soldering Time for Different Lead Wire Length (Fig.H-1)						Max. Soldering Temp.
	Length	Time Tinned Copper Wire	Length	Time Tinned Copper Wire	Length	Time Tinned Copper Wire	
(°C)	(mm)	(s)	(mm)	(s)	(mm)	(s)	(°C)
76 ~ 101	10	1[a]	20	2	30	3	400
102 ~ 115	10	1[a]	20	2	30	3	
116 ~ 135	10	1[a]	20	3	30	5	
136 ~ 150	10	3	20	5	30	5	
151 ~ 230	10	4	20	6	30	7	

All Rights Reserved by Xiamen SET Electronics Co., Ltd. 2021-2023 V2.1

Auxiliary heat sink fixture is required to avoid DC-ATCO cutting off unexpectedly.

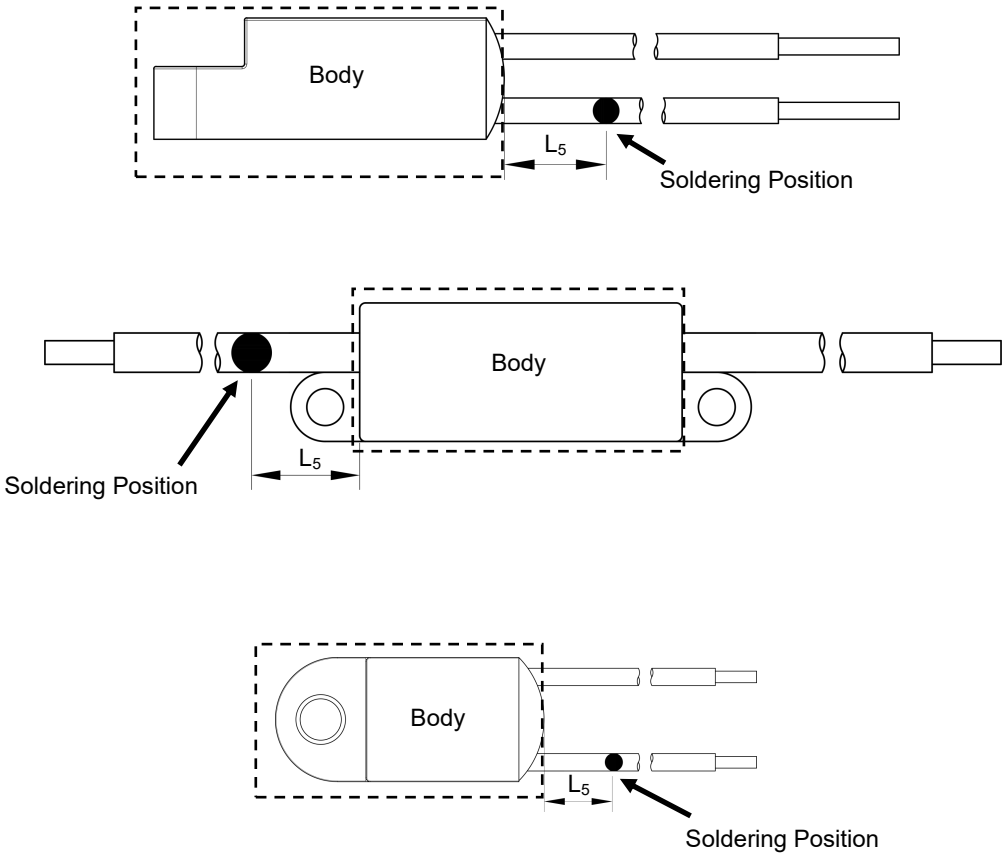

FIGURE T-1

All Rights Reserved by Xiamen SET Electronics Co., Ltd. 2021-2023 V2.1

Lead Wire Forming

1. If lead wire has to be bent, please pay attention to the distance between body and bending point. Refer to Table T-3.
2. When bending leads, please use pincher or similar tools to fix the product as shown in Fig.T-2、to avoid damaging the product.
3. During forming and mounting, lead wire should not be cut, nicked, bent sharply, to avoid breaking the product.
4. Tangential forces on the leads must be avoided (i.e. pushing or pulling on the leads at angle to DC-ATCO body) as such forces may damage the seal of DC-ATCO.
5. Bending radius R: ≥15d, as shown in Figure 2.

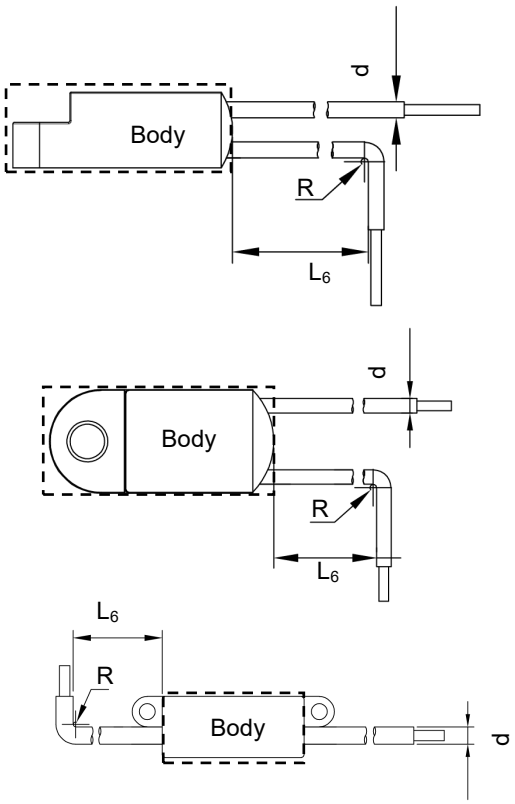

FIGURE T-2

TABLE T-3 Distance between Body and Bending Point

引线 Lead Wire	d	(mm)	≤ 1.0	1.0 to 1.2	> 1.2
	L_6	(mm)	≥ 3	≥ 5	≥ 10

All Rights Reserved by Xiamen SET Electronics Co., Ltd. 2021-2023 V2.1

Features

- 0 to 600 VDC Operating Voltage
- High Accuracy of Functioning Temp.
- Ceramic Case
- Non-Resettable
- RoHS & REACH Compliant

Structure Diagram

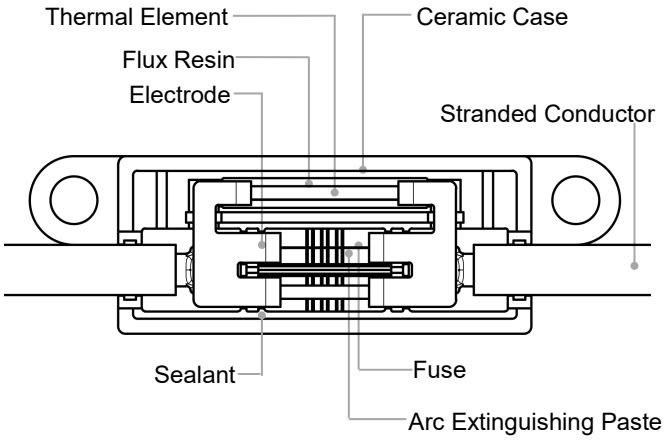

Applications

- Battery Cooling Systems
- Pre-charged Resistors
- Automotive Air-Conditioners
- Heaters

Customization

- Rated Functioning Temp.
- The Shape of Stranded Conductor

Product Schematic

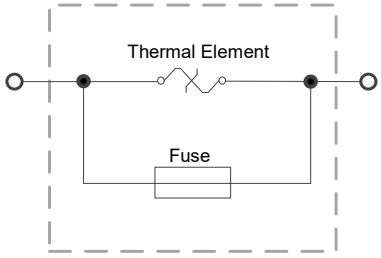

Agency Approvals

Agency Mark	Standards	File No.
®	UL60691	On-going
c ®	CAN-CSA-E60691	On-going

All Rights Reserved by Xiamen SET Electronics Co., Ltd. 2021-2023 V2.1

Dimensions (mm)

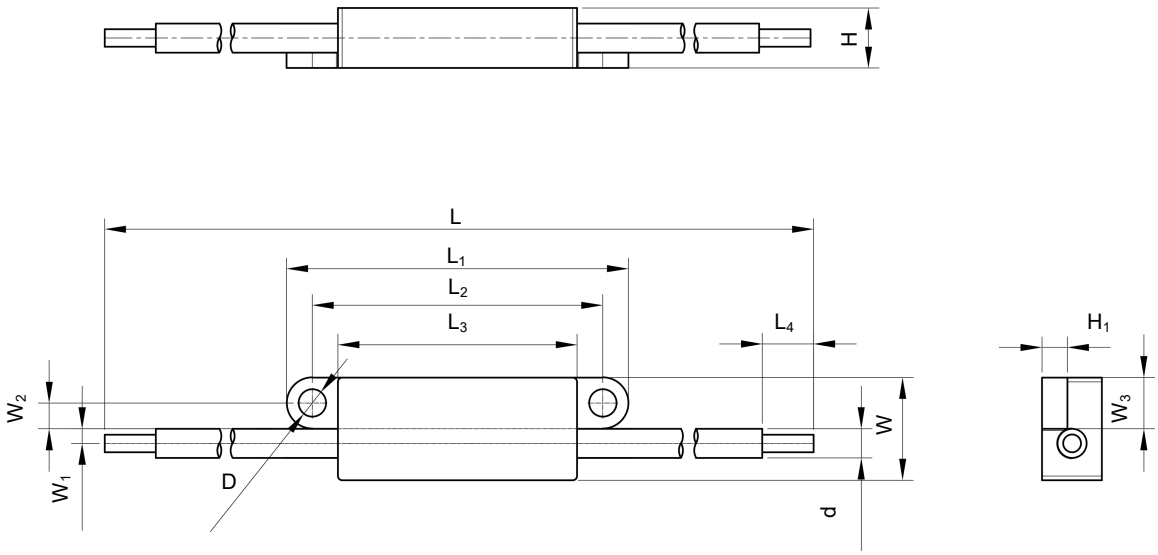

L	L_1	L_2	L_3	L_4	W	W_1	W_2	W_3	H	H_1	D	d
228.0 ± 5.0	40.0 ± 1.0	34.00 ± 1.0	28.0 ± 1.0	10.0 ± 1.0	12.0 ± 1.0	1.7 ± 0.2	3.0 ± 0.2	6.0 ± 0.5	7.0 ± 1.0	3.0 ± 0.5	3.2 ± 0.2	AWG12

Specifications

Model	T_f	Fusing Temp. with Load	T_h	T_m	I_{min}	I_r	U_r	UL	cUL	TUV	VDE	CCC	RoHS REACH
	(°C)	(°C)	(°C)	(°C)	(A)	(A)	(V)						
ASL102A-LSF	102	82 ± 3	55	250	0.5	30	DC 600	○	○	○	○	○	●
ASL115A-LSF	115	95 ± 3	65	250	0.5	30	DC 600	○	○	○	○	○	●
ASL125A-LSF	125	105 ± 3	70	250	0.5	30	DC 600	○	○	○	○	○	●
ASL136A-LSF	135	116 ± 3	80	250	0.5	30	DC 600	○	○	○	○	○	●
ASL150A-LSF	150	130 ± 3	95	250	0.5	30	DC 600	○	○	○	○	○	●
ASL187A-LSF	187	167 ± 3	140	250	0.5	30	DC 600	○	○	○	○	○	●

All Rights Reserved by Xiamen SET Electronics Co., Ltd. 2021-2023 V2.1

ATCO

Temp.-Time Curve

The functioning temperature time curve of Alloy Thermal-Link in different Temp. oil bath. (This curve is for reference only)

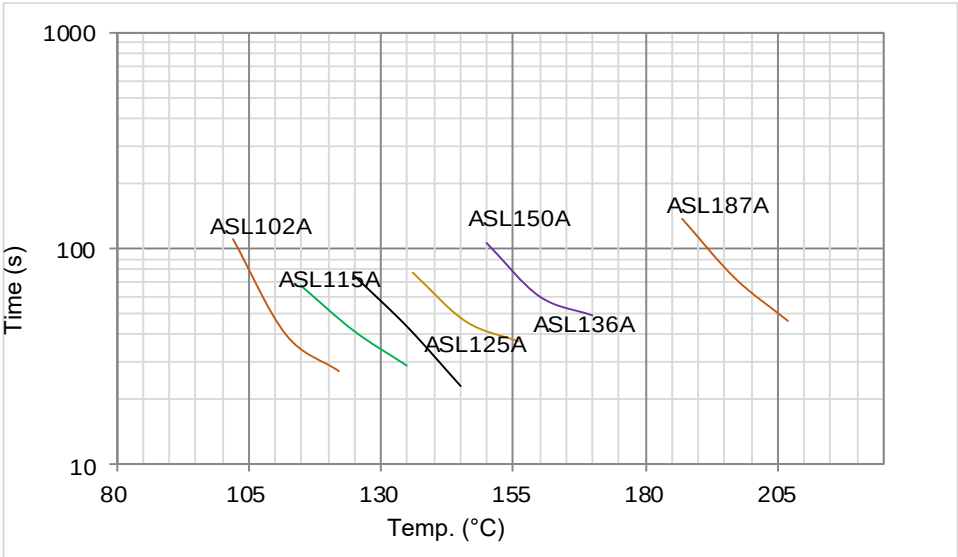

Current-Time Curve

This is an illustrated curve, describing the opening time at Multi-times rated current in the condition of the room Temp. 25 °C. (This curve is for reference only)

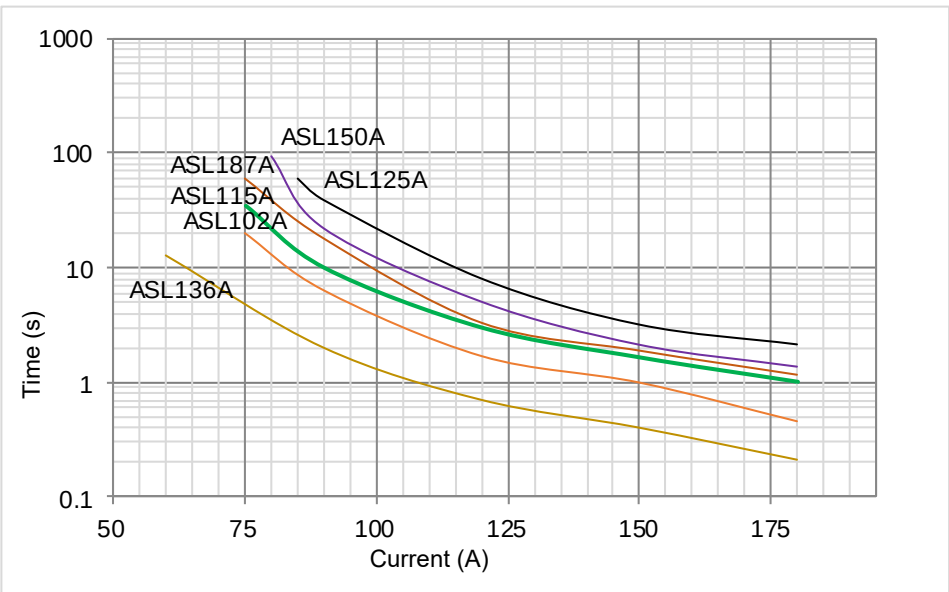

All Rights Reserved by Xiamen SET Electronics Co., Ltd. 2021-2023 V2.1

Packaging Information

Item	Tray	Box	Carton
Dimensions (mm)	422 x 122 x 15.3	429 x 85 x 131	455 x 315 x 285
Quantity (PCS)	20	100	600
Gross Weight (kg):			20 ± 10%

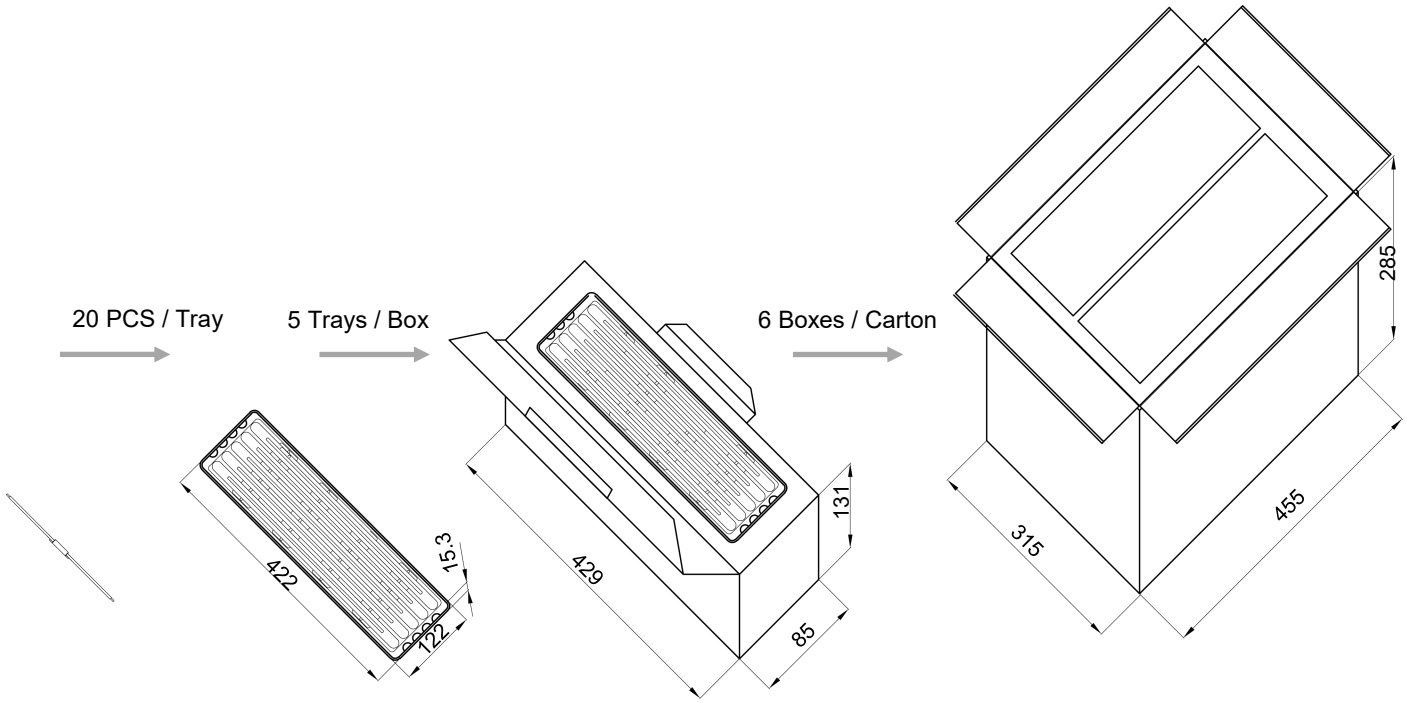

All Rights Reserved by Xiamen SET Electronics Co., Ltd. 2021-2023 V2.1