Surface Mount Fuse-links

SMFL

- Ceramic Tube
- Low Breaking Capacity
- Fast Acting and Time-Lag
- Rated Current: (0.1 ~ 40) A
- Rated Voltage: (125 ~ 350) VAC, (24 ~ 250) VDC
- Lead-free (Pb-free), RoHS & REACH Compliant

Please refer to the datasheet of each series.

https://setsafe.com/Product/Over-Current-Protection/Surface-Mount-Fuse-links-SMFL.html

2024

SET safe | SET fuse

Providing a Total Solution for High Standard Safety Circuit Protection

Surface Mount Fuse-links (SMFL)

Surface Mount Fuse-links (SMFL) is a type of overcurrent protection electronic component. It is in series in the circuit, generally requires small resistance (small power consumption), when the circuit is working normally, it is equivalent to a wire, can lead the power line stably for a long time; When the circuit is unstable or external interference caused by current fluctuations, it should also be able to withstand a certain range of overload or pulse current; Only when there is an obvious overload or short circuit in the circuit, the SFL will act to protect the circuit by cutting off the current.

SMFL is widely used in power supply, home appliances, general lighting, smart home, office equipment, power tools, medical equipment, instrumentation, AC charging pile, micro inverter and other fields of overcurrent protection, with small size, compact structure, good breaking ability, stable and reliable performance.

Technical specifications of Surface Mount Fuse-links (SMFL) available from SETsafe | SETfuse: rated current (0.1~40) A, rated voltage (125~350) VAC, (24~250) VDC, agency approvals including cURus, CQC, TUV, and meet RoHS, REACH requirements.

All Rights Reserved by Xiamen SET Electronics Co., Ltd. 2024-2026 V1.0

Catalogue

1 Feature & Model List Overview 3
2 Glossary 4
3 Reliability Test 5
4 Attention 6
5 Product Series 8
5.1 SCF1032 Series 8
5.2 SCT1032 Series 12
5.3 SCF6125 Series 16
5.4 SCT6125 Series 20

All Rights Reserved by Xiamen SET Electronics Co., Ltd. 2024-2026 V1.0

Miniature Fuses

Surface Mount Fuse-links (SMFL)

Surface Mount Fuse-lingks (SMFL) Feature & Model List Overview

Rated Current I_n (A) \ Model	8	12	16	20
50.00	○	○	○	○
40.00	○	○	SCF1032F40A	○
30.00	○	○	SCF1032F30A	○
25.00	○	○	SCF1032F25A	○
21.00	○	○	○	○
20.00	SCF6125F20A	○	SCF1032F20A	○
16.00	SCF6125F16A	○	SCF1032F16A	○
15.00	SCF6125F15A	○	SCF1032F15A	SCT1032T15A
13.00	○	○	○	○
12.50	SCF6125F12.5A	SCT6125T12.5A	SCF1032F12.5A	SCT1032T12.5A
12.00	SCF6125F12A	SCT6125T12A	SCF1032F12A	SCT1032T12A
10.00	SCF6125F10A	SCT6125T10A	SCF1032F10A	SCT1032T10A
8.00	SCF6125F8A	SCT6125T8A	SCF1032F8A	SCT1032T8A
7.00	○	○	○	○
6.30	SCF6125F6.3A	SCT6125T6.3A	SCF1032F6.3A	SCT1032T6.3A
6.00	○	○	○	○
5.00	SCF6125F5A	SCT6125T5A	SCF1032F5A	SCT1032T5A
4.00	SCF6125F4A	SCT6125T4A	SCF1032F4A	SCT1032T4A
3.15	SCF6125F3.15A	SCT6125T3.15A	SCF1032F3.15A	SCT1032T3.15A
3.00	SCF6125F3A	SCT6125T3A	SCF1032F3A	SCT1032T3A
2.50	SCF6125F2.5A	SCT6125T2.5A	SCF1032F2.5A	SCT1032T2.5A
2.00	SCF6125F2A	SCT6125T2A	SCF1032F2A	SCT1032T2A
1.60	SCF6125F1.6A	SCT6125T1.6A	SCF1032F1.6A	SCT1032T1.6A
1.25	○	SCT6125T1.25A	SCF1032F1.25A	SCT1032T1.25A
1.00	○	SCT6125T1A	SCF1032F1A	SCT1032T1A
0.80	○	SCT6125T800mA	○	SCT1032T800mA
0.63	○	SCT6125T630mA	○	SCT1032T630mA
0.50	○	SCT6125T500mA	○	SCT1032T500mA
0.40	○	SCT6125T400mA	○	SCT1032T400mA
0.315	○	SCT6125T315mA	○	SCT1032T315mA
0.25	○	SCT6125T250mA	○	SCT1032T250mA
0.20	○	SCT6125T200mA	○	SCT1032T200mA
0.16	○	○	○	SCT1032T160mA
0.125	○	○	○	SCT1032T125mA
0.10	○	○	○	SCT1032T100mA
U_r Rated Voltage (VAC) (VDC)	(125 ~ 350) VAC (24 ~ 125) VDC		(125 ~ 350) VAC (32 ~ 250) VDC	
Time Feature	Fast Acting	Time-Lag	Fast Acting	Time-Lag
Tube Material	Ceramic			
Standards	IEC / UL			
Breaking Capacity	50 A ~ 500 A		100 A ~ 1000 A	
Physical Size (mm)	2.7 × 2.7 × 6.3		3.2 × 3.2 × 10.3	
Product Structure	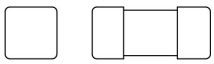		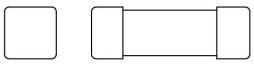	

Page

Remark: Please refer to each product series specification page for complete models

All Rights Reserved by Xiamen SET Electronics Co., Ltd. 2024-2026 V1.0

Glossary

Item	Description
Fuse	A device, by the fusing of one or more of its specially designed and proportioned components, opens the circuit in which it is inserted by breaking the current when this exceeds a given value for a sufficient time. —(IEC 60127)
Rated Current	The rated current of a fuse identifies its current-carrying capacity based on a controllable set of test conditions. Each fuse is marked with its rated current, this rating can be identified with a numeric, alpha, or color code mark. —(IEC 60127)
Rated Voltage	A Max. open circuit voltage in which a fuse can be used, yet safely interrupt an overcurrent. Exceeding the voltage rating of a fuse impairs its ability to clear an overload or short circuit safely. —(IEC 60127)
Ampere Squared Seconds I^2t	The melting, arcing, or clearing integral of a fuse, termed I^2t, is the thermal energy required to melt, arc, or clear a specific current. It can be expressed as melting I^2t, arcing I^2t or the sum of them, clearing I^2t. —(IEC 60127)
Overload	Can be classified as an overcurrent which exceeds the normal full load current of a circuit by 2 to 5 times its magnitude and stays within the normal current path. —(UL 248)
Overcurrent	A condition which exists in an electrical circuit when the normal load current is exceeded. Overcurrent take on two separate characteristics-overloads and short circuits. —(UL 248)
Short Circuit	An overcurrent that leaves the normal current path and greatly exceeds the normal full load current of the circuit by a factor of tens, hundreds, or thousands times. —(UL 248)
Breaking Capacity of a Fuse-link	Value (r.m.s. for AC) of prospective current that a fuse-link is capable of breaking at a stated voltage under prescribed conditions of use and behaviour. —(IEC 60127)

All Rights Reserved by Xiamen SET Electronics Co., Ltd. 2024-2026 V1.0

Reliability Test

No.	Items	Inspection Standards	Standards
1	High Temp. Test	Test Condition: Temperature: (105 ± 2) °C Time: 1000 hours Test Requirement: After the test, the voltage drop shall not have changed by more than 10% of the value measured before the test. The clearing time of the fuse shall be in range.	MIL-STD-202(Test Method 108) GJB360B(Test Method 108)
2	High Humidity Test	Test Condition: Temperature: (40 ± 2) °C Humidity: 90% to 95% Time: 96 hours Test Requirement: After the test, the voltage drop shall not have changed by more than 10 % of the value measured before the test. The clearing time of the fuse shall be in range.	MIL-STD-202(Test Method 103) GJB360B(Test Method 103)
3	Thermal Shock Test	Test Condition: Per Cycle: -55 °C / 30 minutes, 125 °C / 30 minutes Time: 100 Cycles Test Requirement: After the test, the voltage drop shall not have changed by more than 10 % of the value measured before the test. The clearing time of the fuse shall be in range.	MIL-STD-202(Test Method 107) GJB360B(Test Method 107)

All Rights Reserved by Xiamen SET Electronics Co., Ltd. 2024-2026 V1.0

ATTENTION

Inspection

Cold Resistance Test

a. Applied current shall be less than 10% of rated current, at ambient Temp. of (23±2) °C.

b. 4-Wire Resistance Measurement.

Usage

a. Do not touch the fuse body or lead wire when power on, avoiding scald or electric shock.

b. The air pressure is 80 kPa to 106 kPa, corresponding to the altitude of +2000 m to -500 m.

Replacement

For safety reasons, the Fuse is a non-resettable product, please ensure that the alternative Fuse is the same type when replace it.

Storage

Fuse storage should avoid high temperature, high humidity, direct sunlight, and corrosive gases, so as not to affect the solderability of the lead wire. Please use them up within 1 year after receiving the goods.

Installation

Do not apply mechanical stress to the fuse body during or after the installation.

Installation Position

Do not install the fuse on an assembly that may often subject to severe continuous vibration or with corrosive gases (NH_3, SO_2, Cl_2 etc.).

All Rights Reserved by Xiamen SET Electronics Co., Ltd. 2024-2026 V1.0

Soldering Parameters

Reflow soldering Parameters (For Reference Only)

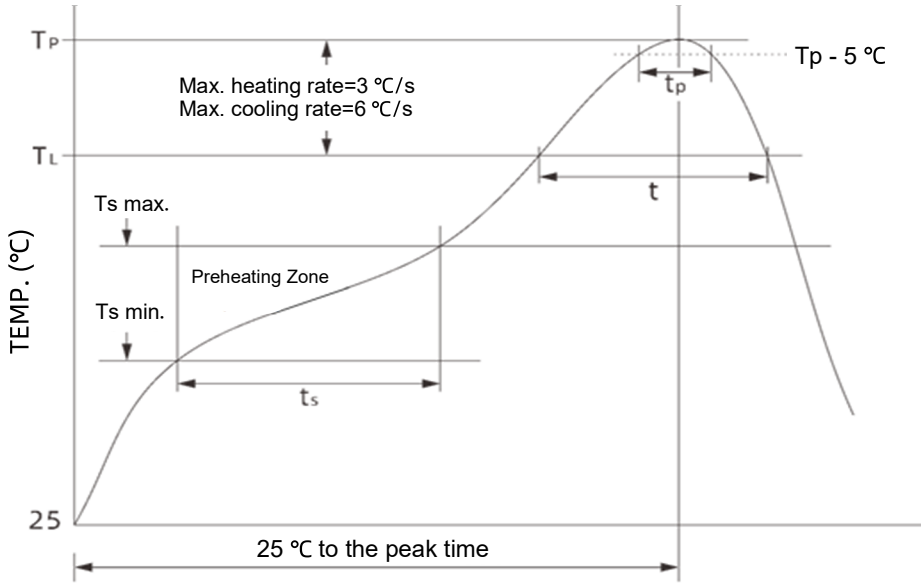

Item	Parameters	Item	Parameters
Preheat_Min. Temp. ($T_{s\ min.}$)	150 ℃	Liquid Phase Time (t)	60 s ~ 150 s
Preheat_Max. Temp. ($T_{s\ max.}$)	200 ℃	Peak Temp. (T_p)	255 ℃ ~ 260 ℃
Time ($T_{s\ min.}$ to $T_{s\ max.}$) (t_s)	60 s ~ 120 s	Duration Of Peak Temp. Within 5 ℃ (t_p)	20 s ~ 40 s
Average Heating Rate ($T_{s\ min.}$ to T_p)	3 ℃/s, Max.	Average Cooling Rate (T_p to $T_{s\ max}$)	6 ℃/s, Max.
Liquid Phase Temperature (T_L)	217 ℃	Time From 25 ° C To Peak Temp.	8 minutes, Max.

Recommended Soldering Parameters

Solder Iron Temp.: (350 ± 5)°C

Soldering Time: 5 seconds, Max.

All Rights Reserved by Xiamen SET Electronics Co., Ltd. 2024-2026 V1.0

Miniature Fuses

Surface Mount Fuse-links (SMFL)

SCF1032 Series, Fast Acting, Ceramic Tube

Dimensions (mm)

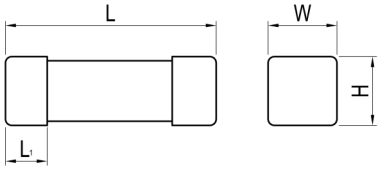

L	L_1	W	H
10.3 ± 0.3	2.0 ± 0.2	3.2 ± 0.3	3.2 ± 0.3

Description

3.2 x 3.2 x 10.3 mm, Fast Acting, SMD fuse, designed to IEC, GB/T and UL standards.

Features

- Body Size: 3.2 x 3.2 x 10.3 mm
- Fast Acting
- Designed to IEC 60127-7 / UL248-14 / GB/T 9364.7
- Lead-free (Pb-free)
- RoHS and REACH Compliant

Applications

- Power Supply
- Household Appliance
- General Lighting
- Smart Home
- Office Equipment
- Electric Tool
- Medical Equipment
- Instruments and Apparatuses

Time/Current Characteristic

% of Ampere Rating	Ampere Rating	Opening Time
100%	0.5 A ~ 40 A	4 hours, Max.
200%	0.5 A ~ 40 A	60 seconds, Max.
1000%	0.5 A ~ 40 A	0.06 second, Max.

Part Numbering System

SCF1032F1.25A250VT-001

- **Other Options**
- **Packaging**
  T: Taping
  B: Bulk
- **Rated Voltage**
- **Rated Current**
- **Product Series**

Structure Diagram

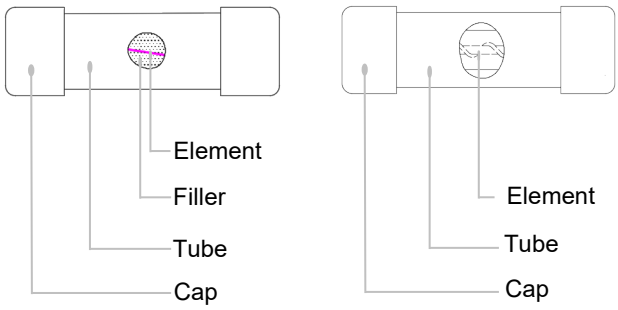

Agency Approvals

Agency Symbol	The file No. and certification No. obtained by SETsafe|SETfuse	Ampere Range
c UL us	E345932	0.5 A ~ 40 A
	Pending	0.5 A ~ 40 A
CQC	Pending	0.5 A ~ 40 A

All Rights Reserved by Xiamen SET Electronics Co., Ltd. 2024-2026 V1.0

Specifications

Series	Rated Current	Rated Breaking Capacity	Average Typical Melting I^2t [a]	Agency Approvals			Environmental	
				TUV	CQC	cURus	RoHs	REACH
	(A)		(A^2sec)					
SCF1032	0.5	100 A@250 VAC 100 A@250 VDC 1000 A@125 VAC 1000 A@125 VDC / 75 VDC / 63 VDC / 48 VDC / 32 VDC	0.2	○	○	●	●	●
SCF1032	0.63		0.4	○	○	●	●	●
SCF1032	0.8		0.64	○	○	●	●	●
SCF1032	1		1.2	○	○	●	●	●
SCF1032	1.25		0.2	○	○	●	●	●
SCF1032	1.6		0.5	○	○	●	●	●
SCF1032	2		0.9	○	○	●	●	●
SCF1032	2.5		1.7	○	○	●	●	●
SCF1032	3		2.5	○	○	●	●	●
SCF1032	3.15		2.8	○	○	●	●	●
SCF1032	4		5.0	○	○	●	●	●
SCF1032	5		9.5	○	○	●	●	●
SCF1032	6.3		15	○	○	●	●	●
SCF1032	8		38	○	○	●	●	●
SCF1032	10		73	○	○	●	●	●
SCF1032	12		100	○	○	●	●	●
SCF1032	12.5		110	○	○	●	●	●
SCF1032	15		230	○	○	●	●	●
SCF1032	16		240	○	○	●	●	●
SCF1032	20		400	○	○	●	●	●
SCF1032	25	100 A@125 VAC 100 A@125 VDC	630	○	○	●	●	●
SCF1032	30		850	○	○	●	●	●
SCF1032	35		1200	○	○	●	●	●
SCF1032	40		1500	○	○	●	●	●

Remark: a: I^2t value is measured at 10 I_N.

○: Pending.

RoHS and REACH Compliant.

All Rights Reserved by Xiamen SET Electronics Co., Ltd. 2024-2026 V1.0

Time Current Curve (For Reference Only)

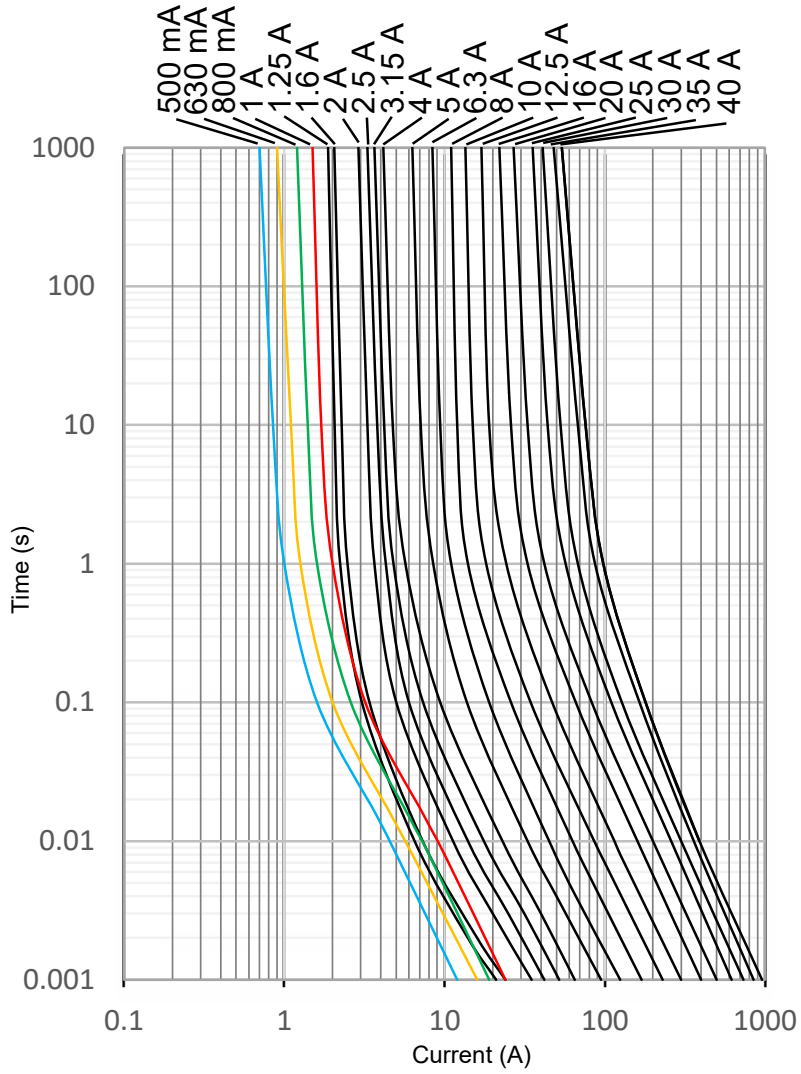

Rated Current Derating Curve（For Reference Only）

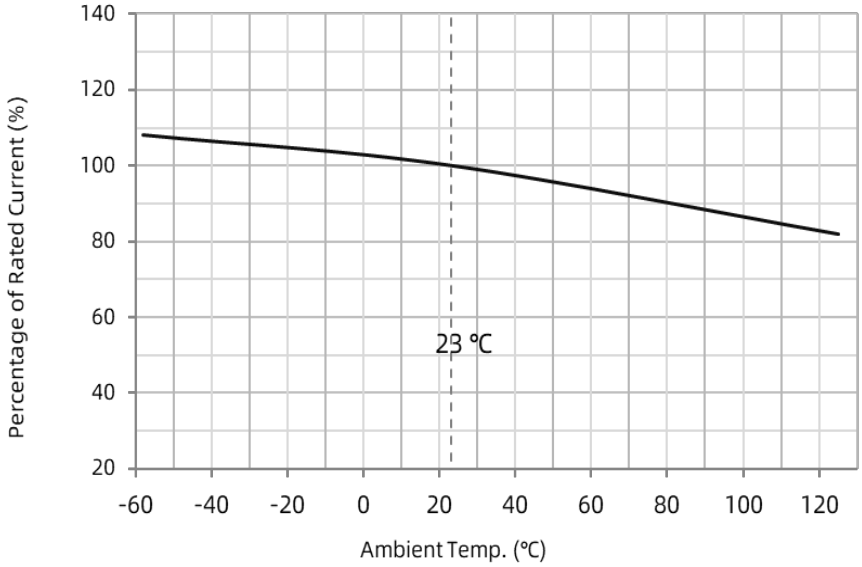

All Rights Reserved by Xiamen SET Electronics Co., Ltd. 2024-2026 V1.0

Packaging Information

All dimensions in mm

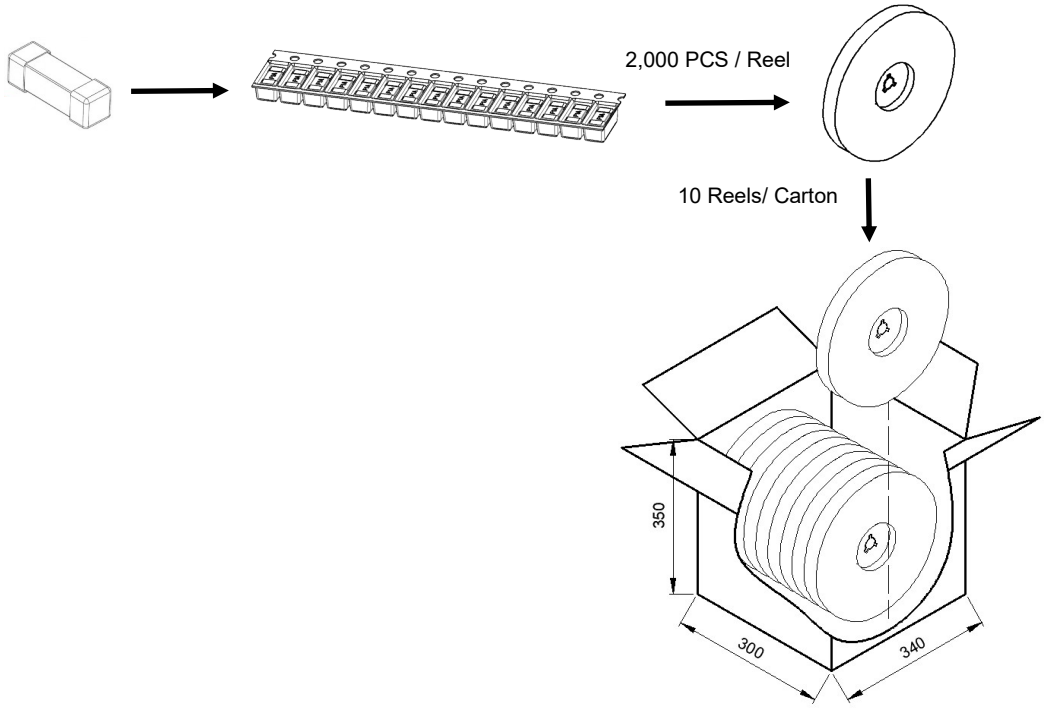

Item	Reel	Carton
Q'ty (PCS)	2,000	20,000
Gross Weight (kg)	9.0 ± 10%	

All Rights Reserved by Xiamen SET Electronics Co., Ltd. 2024-2026 V1.0

Miniature Fuses

Surface Mount Fuse-links (SMFL)

SCT1032 Series, Time-Lag, Ceramic Tube

Dimensions (mm)

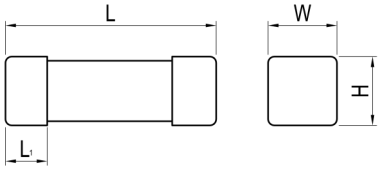

L	L_1	W	H
10.3 ± 0.3	2.0 ± 0.2	3.2 ± 0.3	3.2 ± 0.3

Description

3.2 x 3.2 x 10.3 mm, Time-Lag, SMD fuse, designed to IEC, GB/T and UL standards.

Features

- Body Size: 3.2 x 3.2 x 10.3 mm
- Time-Lag
- Designed to IEC 60127-7 / UL248-14 / GB/T 9364.7
- Lead-free (Pb-free)
- RoHS and REACH Compliant

Applications

- Power Supply
- Household Appliance
- General Lighting
- Smart Home
- Office Equipment
- Electric Tool
- Medical Equipment
- SPD

Part Numbering System

SCT1032T1.25A250VT-001

- **Other Options**
- **Packaging**
  T: Taping
  B: Bulk
- **Rated Voltage**
- **Rated Current**
- **Product Series**

Structure Diagram

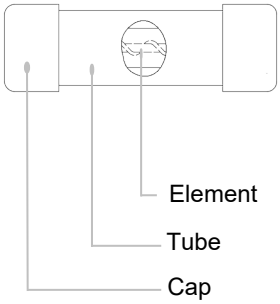

Time/Current Characteristic

% of Ampere Rating	Ampere Rating	Opening Time
100%	0.1 A ~ 15 A	4 hours, Max.
200%	0.1 A ~ 15 A	60 s, Max.
1000%	0.1 A ~ 15 A	0.01 s ~ 0.1 s

Agency Approvals

Agency Symbol	The file No. and certification No. obtained by SETsafe|SETfuse	Ampere Range
c UL us	E345932	0.1 A ~ 15 A
	Pending	0.1 A ~ 15 A
CQC	CQC22012330354 CQC22012331636	0.1 A ~ 15 A

All Rights Reserved by Xiamen SET Electronics Co., Ltd. 2024-2026 V1.0

Specifications

Series	Rated Current	Rated Breaking Capacity	Average Typical Melting I^2t [a]	Agency Approvals			Environmental	
				TUV	CQC	cURus	RoHs	REACH
	(A)		(A²sec)					
SCT1032	0.1	100 A@350 VAC / 300 VAC / 250 VAC / 125 VAC 1000 A@125 VAC 30 A@250 VDC 1000 A@125 VDC / 75 VDC / 63 VDC / 48 VDC / 32 VDC	0.018	○	●	●	●	●
SCT1032	0.125		0.03	○	●	●	●	●
SCT1032	0.16		0.04	○	●	●	●	●
SCT1032	0.2		0.1	○	●	●	●	●
SCT1032	0.25		0.15	○	●	●	●	●
SCT1032	0.315		0.48	○	●	●	●	●
SCT1032	0.4		0.8	○	●	●	●	●
SCT1032	0.5		2.0	○	●	●	●	●
SCT1032	0.63		3.2	○	●	●	●	●
SCT1032	0.8		4.5	○	●	●	●	●
SCT1032	1		5.5	○	●	●	●	●
SCT1032	1.25		10	○	●	●	●	●
SCT1032	1.6		14	○	●	●	●	●
SCT1032	2		23	○	●	●	●	●
SCT1032	2.5	100 A@350 VAC / 300 VAC / 250 VAC / 125 VAC 1000 A@125 VAC 1000 A@125 VDC / 75 VDC / 63 VDC / 48 VDC / 32 VDC	52	○	●	●	●	●
SCT1032	3		72	○	○	●	●	●
SCT1032	3.15		75	○	●	●	●	●
SCT1032	4		118	○	●	●	●	●
SCT1032	5		197	○	●	●	●	●
SCT1032	6.3		210	○	●	●	●	●
SCT1032	7		290	○	○	●	●	●
SCT1032	8		400	○	●	●	●	●
SCT1032	10		450	○	●	●	●	●
SCT1032	12		550	○	○	●	●	●
SCT1032	12.5		560	○	●	●	●	●
SCT1032	15		740	○	●	●	●	●

Remark:

a: I^2t value is measured at 10 I_N.

○: Pending.

RoHS and REACH Compliant.

All Rights Reserved by Xiamen SET Electronics Co., Ltd. 2024-2026 V1.0

Time Current Curve (For Reference Only)

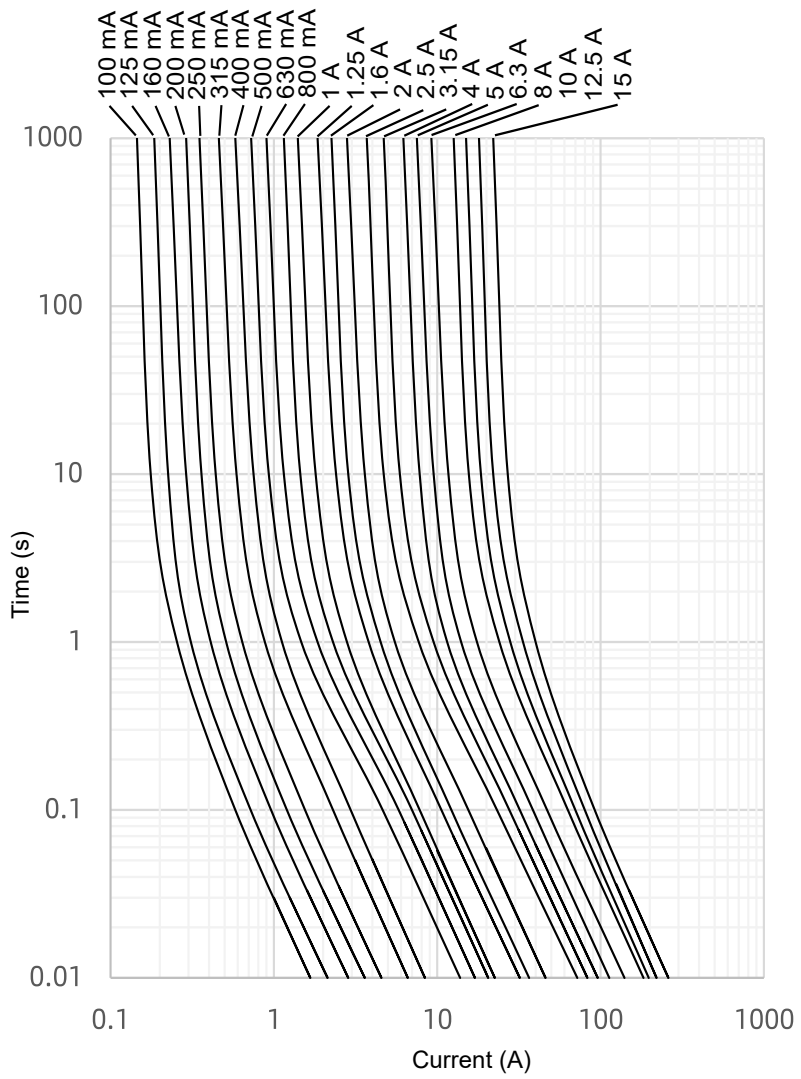

Rated Current Derating Curve（For Reference Only）

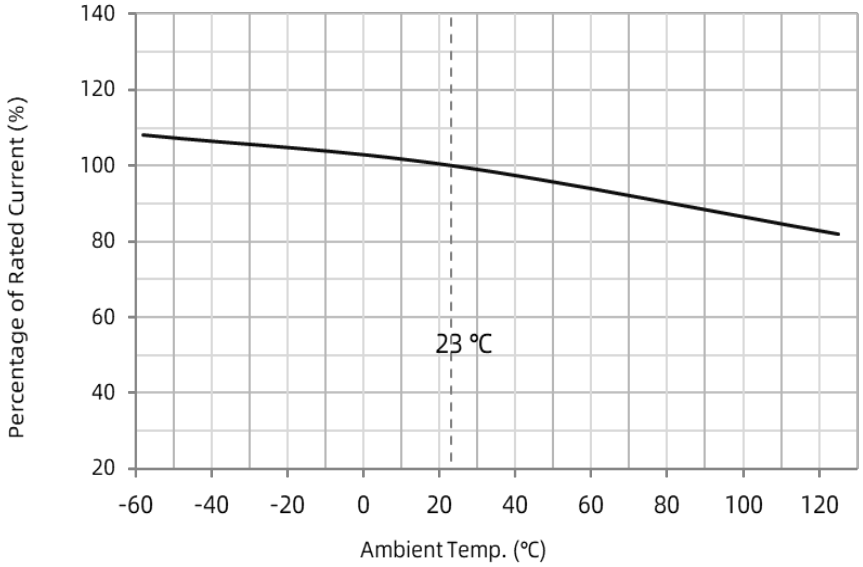

All Rights Reserved by Xiamen SET Electronics Co., Ltd. 2024-2026 V1.0

Packaging Information

All dimensions in mm

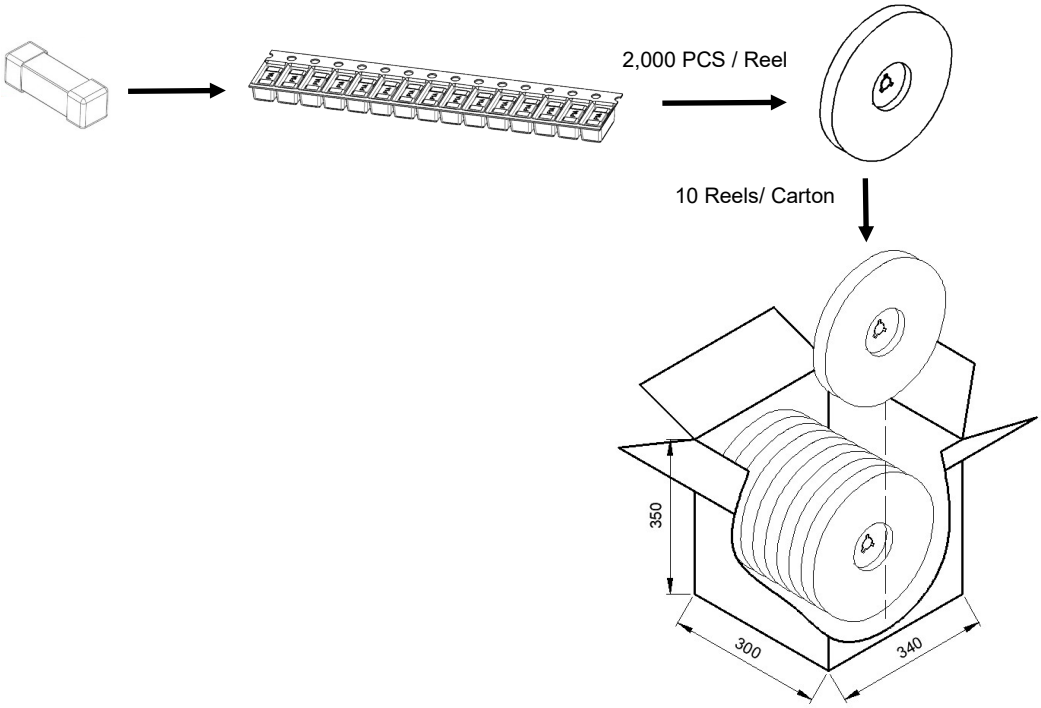

Item	Reel	Carton
Q'ty (PCS)	2,000	20,000
Gross Weight (kg)	9.0 ± 10%	

All Rights Reserved by Xiamen SET Electronics Co., Ltd. 2024-2026 V1.0

Miniature Fuses

Surface Mount Fuse-links (SMFL)

SCF6125 Series, Fast Acting, Ceramic Tube

Dimensions (mm)

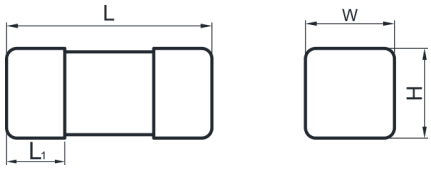

L	L_1	w	H
6.3 ± 0.3	1.7 ± 0.2	2.70 ± 0.25	2.70 ± 0.25

Description

2.7 x 2.7 x 6.3 mm, Fast Acting, SMD fuse, designed to IEC, GB/T and UL standards.

Features

- Body Size: 2.7 x 2.7 x 6.3 mm
- Fast Acting
- Designed to IEC 60127-7 / UL248-14 / GB/T 9364.7
- Lead-free (Pb-free)
- RoHS and REACH Compliant

Applications

- Power Supply
- Household Appliance
- General Lighting
- Smart Home
- Office Equipment
- Electric Tool
- Medical Equipment
- Instruments and Apparatuses

Time/Current Characteristic

% of Ampere Rating	Ampere Rating	Opening Time
100%	0.5 A ~ 20 A	4 hours, Max.
200%	0.5 A ~ 20 A	5 s, Max.
1000%	0.5 A ~ 20 A	0.01 s, Max.

Part Numbering System

SCF6125F1.25A250VT-001

- **Other Options**
- **Packaging**
  T: Taping
  B: Bulk
- **Rated Voltage**
- **Rated Current**
- **Product Series**

Structure Diagram

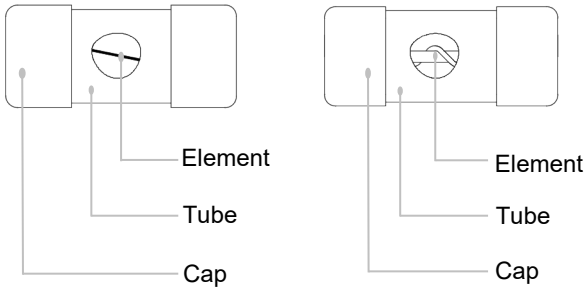

Agency Approvals

Agency Symbol	The file No. and certification No. obtained by SETsafe|SETfuse	Ampere Range
c UL us	E345932	0.5 A ~ 20 A
	Pending	0.5 A ~ 20 A
cec	Pending	0.5 A ~ 20 A

All Rights Reserved by Xiamen SET Electronics Co., Ltd. 2024-2026 V1.0

Specifications

Series	Rated Current	Rated Breaking Capacity	Average Typical Melting I^2t [a]	Agency Approvals			Environmental	
							RoHS	REACH
	(A)		(A²sec)	TUV	CQC	UL/CUL		
SCF6125	0.5	50 A@250 VAC 200 A@125 VAC 200 A@125 VDC 500 A@75 VDC / 63 VDC / 48 VDC / 32 VDC / 24 VDC	0.25	○	○	●	●	●
SCF6125	0.63		0.32	○	○	●	●	●
SCF6125	0.8		0.77	○	○	●	●	●
SCF6125	1		0.8	○	○	●	●	●
SCF6125	1.25		0.78	○	○	●	●	●
SCF6125	1.6		1.3	○	○	●	●	●
SCF6125	2		3.2	○	○	●	●	●
SCF6125	2.5		0.85	○	○	●	●	●
SCF6125	3		0.9	○	○	●	●	●
SCF6125	3.15		1.1	○	○	●	●	●
SCF6125	4		4.5	○	○	●	●	●
SCF6125	5		6.3	○	○	●	●	●
SCF6125	6.3		12	○	○	●	●	●
SCF6125	8		19	○	○	●	●	●
SCF6125	10		40	○	○	●	●	●
SCF6125	12.5		75	○	○	●	●	●
SCF6125	15		90	○	○	●	●	●
SCF6125	16		102	○	○	●	●	●
SCF6125	20		240	○	○	●	●	●

Remark:

a: I^2t value is measured at 10 I_N.

○: Pending.

RoHS and REACH Compliant.

All Rights Reserved by Xiamen SET Electronics Co., Ltd. 2024-2026 V1.0

Time Current Curve (For Reference Only)

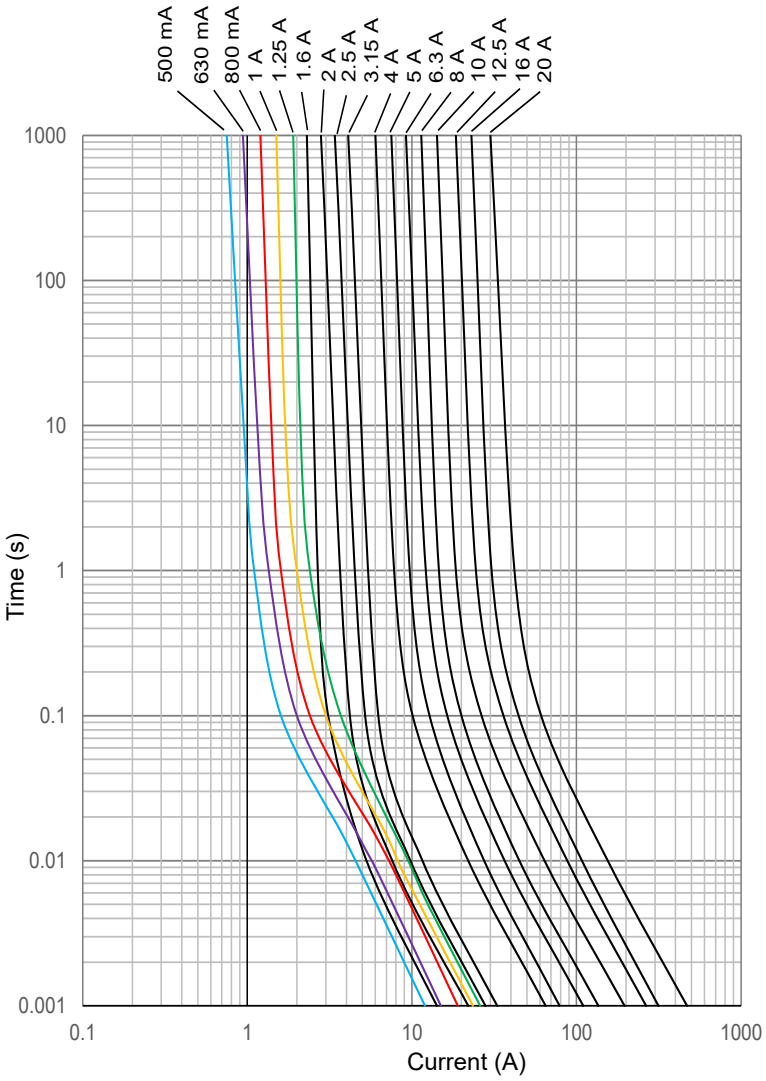

Rated Current Derating Curve（For Reference Only）

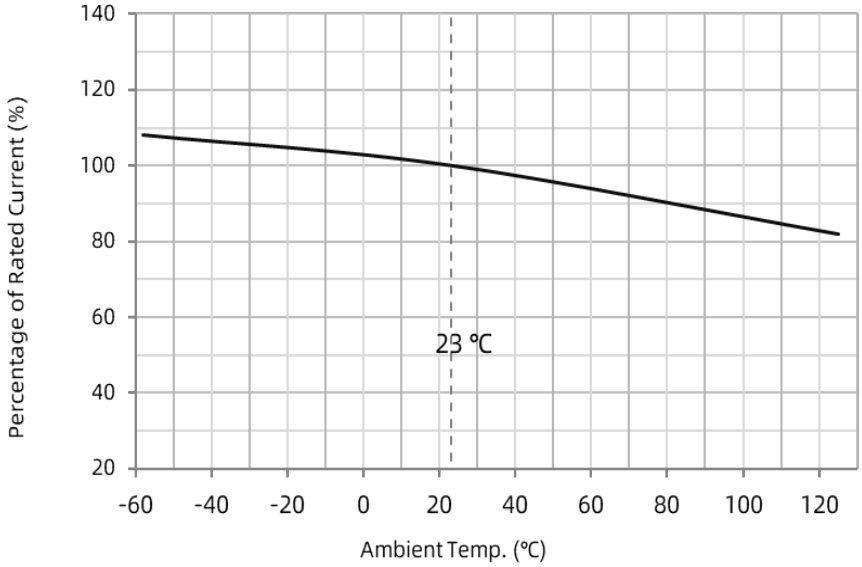

All Rights Reserved by Xiamen SET Electronics Co., Ltd. 2024-2026 V1.0

Packaging Information

All dimensions in mm

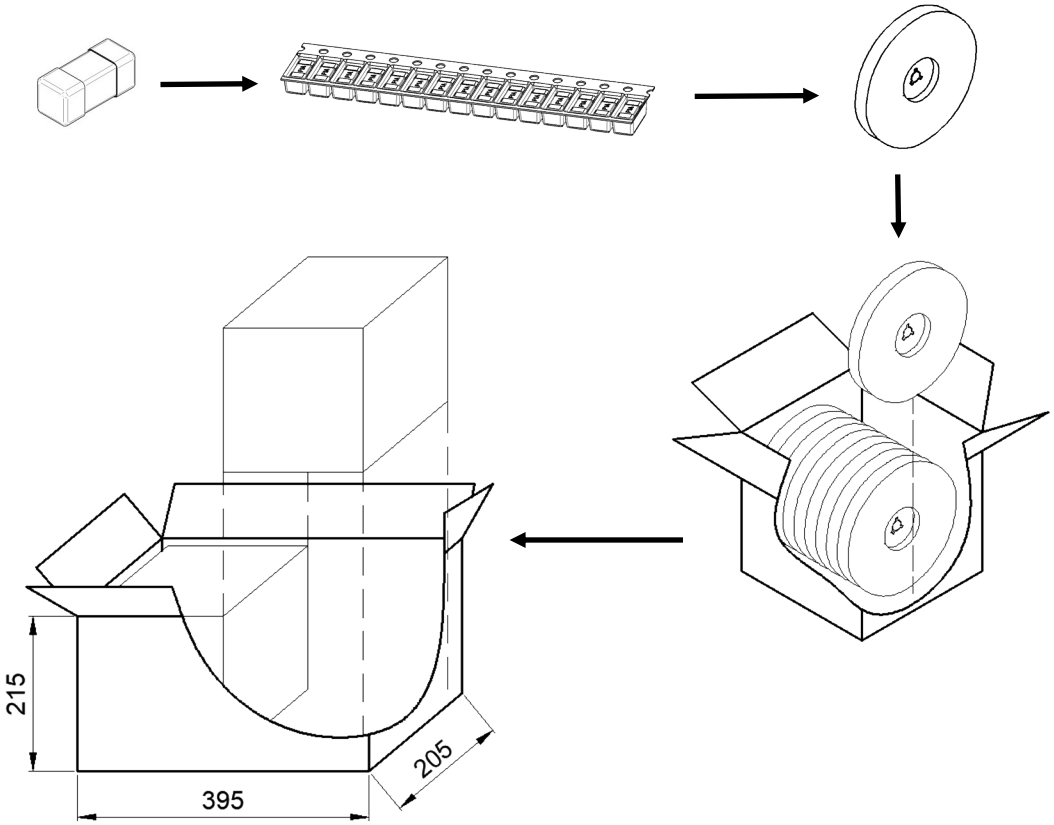

Item	Reel	Box	Carton
Q'ty (PCS)	1,000	10,000	20,000
Gross Weight (kg)		4.7 ± 10%	

All Rights Reserved by Xiamen SET Electronics Co., Ltd. 2024-2026 V1.0

Miniature Fuses

Surface Mount Fuse-links (SMFL)

SCT6125 Series, Time-Lag, Ceramic Tube

Dimensions (mm)

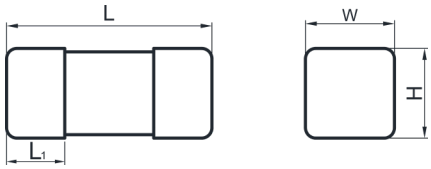

L	L_1	w	H
6.3 ± 0.3	1.7 ± 0.2	2.70 ± 0.25	2.70 ± 0.25

Description

2.7 x 2.7 x 6.3 mm, Time-Lag, SMD fuse, designed to IEC, GB/T and UL standards.

Features

- Body Size: 2.7 x 2.7 x 6.3 mm
- Time-Lag
- Designed to IEC 60127-7 / UL248-14 / GB/T 9364.7
- Lead-free (Pb-free)
- RoHS and REACH Compliant

Applications

- Power Supply
- Household Appliance
- General Lighting
- Smart Home
- Office Equipment
- Electric Tool
- Medical Equipment
- SPD

Part Numbering System

SCT6125T1.25A250VT-001

- **Other Options**
- **Packaging**
  T: Taping
  B: Bulk
- **Rated Voltage**
- **Rated Current**
- **Product Series**

Structure Diagram

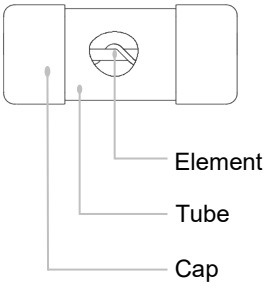

Time/Current Characteristic

% of Ampere Rating	Ampere Rating	Opening Time
100%	0.2 A ~ 12.5 A	4 hours, Max.
200%	0.2 A ~ 12.5 A	60 s, Max.
1000%	0.2 A ~ 12.5 A	0.01 s ~ 0.1 s

Agency Approvals

Agency Symbol	The file No. and certification No. obtained by SETsafe|SETfuse	Ampere Range
c UL us	E345932	0.2 A ~ 12.5 A
	J 50604769	0.2 A ~ 12.5 A
	CQC22012331770 CQC22012331771 CQC22012331772	0.2 A ~ 12.5 A

All Rights Reserved by Xiamen SET Electronics Co., Ltd. 2024-2026 V1.0

Specifications

Series	Rated Current	Rated Breaking Capacity	Average Typical Melting I^2t [a]	Agency Approvals			Environmental	
				TUV	CQC	UL/CUL	RoHS	REACH
	(A)		(A²sec)					
SCT6125	0.2	35 A@350 VAC / 300 VAC / 250 VAC / 125 VAC 50 A@250 VAC / 125 VAC 500 A@125 VAC 500 A@125 VDC 1000 A@75 VDC / 63 VDC / 48 VDC / 32 VDC	0.06	●	●	●	●	●
SCT6125	0.25		0.11	●	●	●	●	●
SCT6125	0.315		0.23	●	●	●	●	●
SCT6125	0.4		0.45	●	●	●	●	●
SCT6125	0.5		0.7	●	●	●	●	●
SCT6125	0.63		1.3	●	●	●	●	●
SCT6125	0.8		1.4	●	●	●	●	●
SCT6125	1		2.5	●	●	●	●	●
SCT6125	1.25		3.4	●	●	●	●	●
SCT6125	1.6		5.5	●	●	●	●	●
SCT6125	2		10	●	●	●	●	●
SCT6125	2.5		20	●	●	●	●	●
SCT6125	3.15		22	●	●	●	●	●
SCT6125	4		43	●	●	●	●	●
SCT6125	5		55	●	●	●	●	●
SCT6125	6.3	50 A@250 VAC / 125 VAC 500 A@125 VAC 500 A@125 VDC 1000 A@75 VDC / 63 VDC / 48 VDC / 32 VDC	87	●	●	●	●	●
SCT6125	7		112			●	●	●
SCT6125	8		141	●	●	●	●	●
SCT6125	10		170	●	●	●	●	●
SCT6125	12		210			●	●	●
SCT6125	12.5		200	●	●	●	●	●

Remark:

a: I^2t value is measured at 10 I_N.

RoHS and REACH Compliant.

All Rights Reserved by Xiamen SET Electronics Co., Ltd. 2024-2026 V1.0

Time Current Curve (For Reference Only)

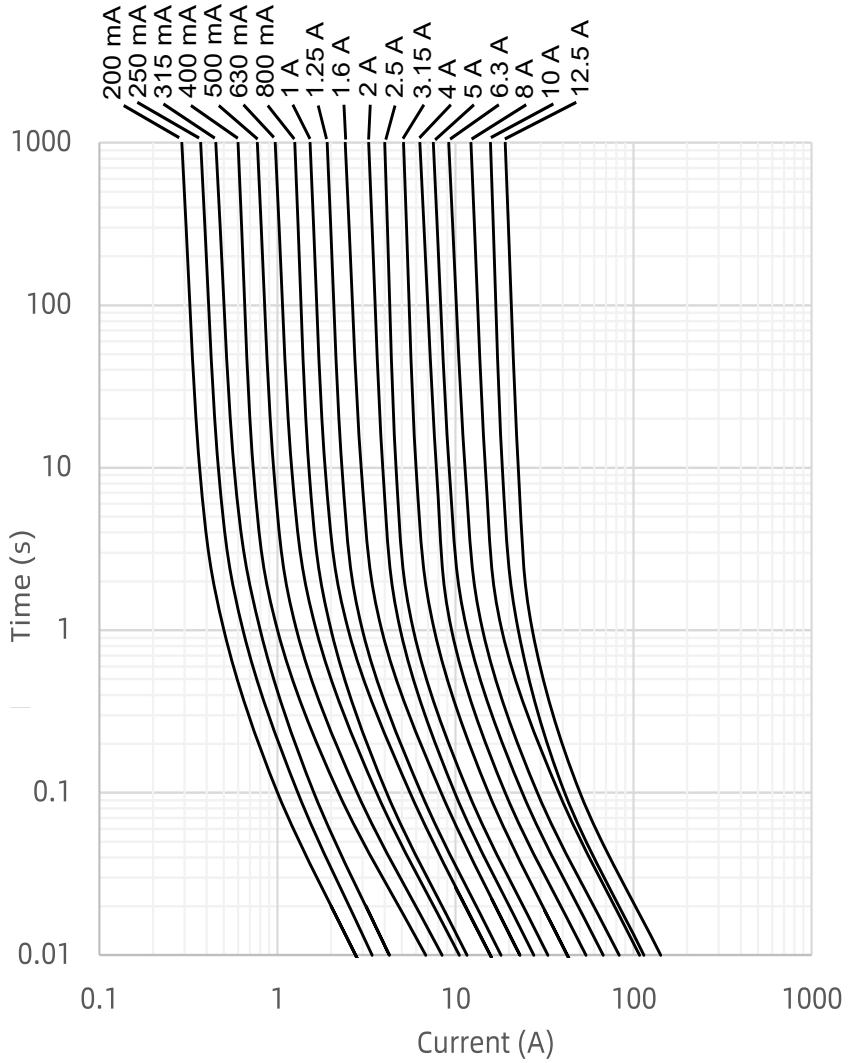

Rated Current Derating Curve（For Reference Only）

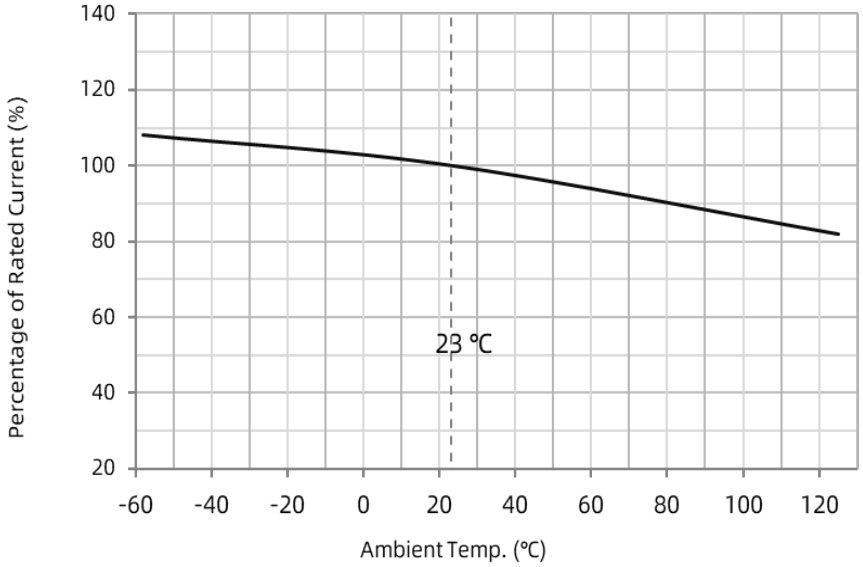

All Rights Reserved by Xiamen SET Electronics Co., Ltd. 2024-2026 V1.0

Packaging Information

All dimensions in mm

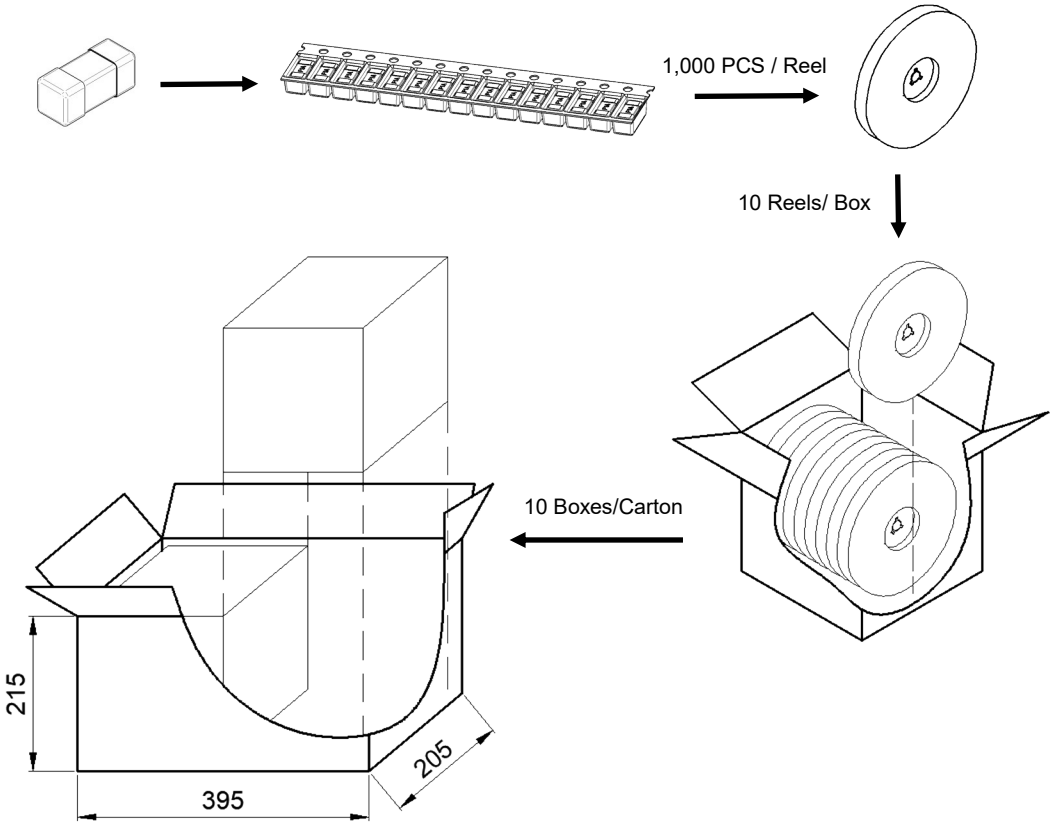

Item	Reel	Box	Carton
Q'ty (PCS)	1,000	10,000	20,000
Gross Weight (kg)		4.7 ± 10%	

All Rights Reserved by Xiamen SET Electronics Co., Ltd. 2024-2026 V1.0

www.SETsafe.com
www.SETfuse.com

20+

OVER 20 YEARS OF DESIGNING, MANUFACTURING AND SELLING OF CIRCUIT PROTECTION COMPONENTS

40+

SOLD TO MORE THAN 40 COUNTRIES AND REGIONS

Automatic

AUTOMATIC PROCESS PRODUCTION

500

A BRAND CHOSEN BY FORTUNE 500 COMPANIES

SET safe | SET fuse

NO. 8067, 8001 West Xiang'an Road,Torch High-tech industrial District, Xiang'an 361101 Xiamen P.R. China
+ 86 592-5715-838 sales@SETfuse.com

All Rights Reserved by Xiamen SET Electronics Co., Ltd. Ver. 2024 - 2026